TX100 - pH/mV

2-Wire Loop-Powered Transmitter

Form: INSTRTX100-Rev G
©2011 Sensorex Corporation

ISO9001:2008

European Declaration of Conformity

Manufacturer: Sensorex Corp.
11751 Markon Drive
Garden Grove, CA. 92841
Telephone: 714-895-4344
FAX: 714-894-4839

Product: 4-20mA Loop Powered Transmitter
Model No. TX100
Serial Number:0207xxxxx-1214xxxxx

The undersigned hereby declares, on behalf of Sensorex Corp. of Garden Grove, CA that the above-referenced product, to which this declaration relates, is in conformity with the provisions of the Directive of Electromagnetic Compatibility (EMC) 2004/108/EC

- European Standards EN 61326-1

The Technical Construction File required by this Directive is maintained at the corporate headquarters of Sensorex Corp, 11751 Markon Drive, Garden Grove, CA 92841.

Mack Reed
Director of Quality
Signed June 22, 2011 Garden Grove, CA

TX100 pH/MV Transmitter ESSENTIAL INSTRUCTIONS

READ THIS BEFORE USING YOUR TX100 pH/mV TRANSMITTER!

Thank you for choosing the TX100 pH/mV transmitter. This transmitter is a user-friendly microprosser based transmitter for pH and mV measurement. As with all electronic instruments, it is essential to follow all directions for optimal performance. In particular, you must properly install, use and maintain the TX100 to ensure that it will continue to operate within its specifications.

• Follow all warnings, cautions and instructions marked on and supplied with the transmitter. Please contact your supplier with any product questions or concerns.

• Install the transmitter as specified in this manual, following all applicable local and national codes.

• Do not attempt to repair your TX100 transmitter or use any replacement parts from any other supplier.

• If you find any errors in this manual, please report them to Sensorex by fax 714-894-4839 or via e-mail at TECHNICAL AT SENSOREX.COM

• Please complete the WARRANTY REGISTRATION located at the back of this manual and fax to Sensorex at 714-894-4839 or scan and e-mail to TECHNICAL AT SENSOREX.COM

About This Document

This manual contains instructions for the installation, operation and care of the TX100 pH/mV transmitter. The following list provides notes concerning revisions of this document.

Rev Level	Date	Notes
A	8/2007	1st revision of manual. Removed lightning protection graphic on pg. 15 and "DO NOT REMOVE NOTE"
B	10/2007	Added "Essential Instructions". Fixed drawing in "Quick Start Guide". Added bold text to "Cord Grip installation" section. Fixed Figure references Section 8.1 and 8.2. Fixed drawing Figure 11-1. Fixed drawing Figure 11-3. Added bold text to Section 9.7. Added EMI/RFI specs in TX100 Specifications. Revised Figure 10-1. Re-numbered all pages.
C	12/2007	Fixed Figure 11-3 and 11-4 (removed top an bottom holes from mounting plate)
D	3/2009	Corrected ORP range specification from +/-1999mV to +/- 1000mV revised Figure 2-1 to used flathead screwdriver at edge of knockouts.
E	4/28/10	Clarified NEMA, IP ratings
F	6/23/11	Added European Declaration of Conformity Certificate to inside cover
G	10/12/11	Correct ORP Range in Specifications
H	01/2013	Updated product photo on cover.

Table of Contents

Part 1 Introduction

1.1	General	1
1.2	Features	1
1.3	TX100 Specifications	2
1.4	Quick Start Guide	3

Part 2 Transmitter Mounting

2.1	Cord Grip Installation	5
2.2	Wall Mounting	6
2.3	Panel Mounting	7
2.4	DIN Rail Mounting	8
2.5	Pipe Mounting	9

Part 3 Sensor Mounting

3.1	General	10

Part 4 Transmitter Electrical Installation

4.1	General	11
4.2	Power	11
4.3	4-20mA Loop wiring	12

Part 5 Sensor Electrical Connection

5.1	General	13
5.2	Direct Sensor Connection	13

Part 6 Keypad Function and LCD Display

6.1	Keypad Function	14
6.2	LCD Display	15

Part 7 Transmitter Programming

7.1	General	16

Part 8 Calibration

8.1	Getting Started	17
8.2	2-Point pH calibration	17
8.3	Temperature Calibration (with ATC)	19

Table of Contents

Part 9 Setup Functions

9.1	Probe Select Menu	20
9.2	Calibration Offset	21
9.3	Range Menu	22
9.4	Limit Menu	23
9.5	Hold Menu	24
9.6	Clean Probe Menu	25
9.7	Factory Reset	26
9.8	Manual Temperature Compensation (without ATC)	27
9.9	Temperature Unit Menu	28

Part 10 Troubleshooting

10.1	General	29
10.2	Troubleshooting Guidelines	29
10.3	Troubleshooting Chart	29

Part 11 Maintenance

11.1	Overview	30
11.2	Replacement Parts	30

Part 12 Warranty and Product Returns

12.1	Product Warranty	34
12.2	Return of Items	34

Diagrams and Illustrations

Figure 2-1	Conduit port Knockout removal	5
Figure 2-2	Cord grip Mounting	5
Figure 2-3	Wall Mount	6
Figure 2-4	Panel Mount	7
Figure 2-5	DIN RAIL Mount	8
Figure 2-6	3/4" Pipe Mount	9
Figure 4-1	Power connections (schematic)	11
Figure 4-1a	4-20mA loop wiring (schematic)	12
Figure 5-1	Electrode connections (TBM1)	13
Figure 6-1	Transmitter Keypad	14
Figure 6-2	LCD Definition	15
Figure 7-1	Transmitter Main Menu	16
Figure 8-1	2-Point pH Calibration	18
Figure 8-2	Temperature Calibration	19
Figure 9-1	Probe Select Menu	20
Figure 9-2	Calibration Offset	21
Figure 9-3	Range Menu	22
Figure 9-4	Limit Menu	23
Figure 9-5	Hold Menu	24
Figure 9-6	Clean Probe Menu	25
Figure 9-7	Factory Reset Menu	26
Figure 9-8	Manual Temperature Compensation	27
Figure 9-9	Temperature Unit Menu	28
Figure 10-1	Troubleshooting Chart	29
Figure 11-1	Wall Mount Parts - Exploded View	30
Figure 11-2	Panel Mount Parts - Exploded View	31
Figure 11-3	DIIN- Rail Mount Parts - Exploded View	32
Figure 11-4	Pipe Mount Parts - Exploded View	33

Part 1 Introduction

1.1 General

The Model TX100 is a microprocessor-based, loop-powered monitoring system, designed for the continuous measurement of pH, mV (ORP) and temperature. The full scale operating range of the transmitter may be user adjusted to any value between 0-14 pH or -1999 to + 1999mV. All transmitter features are selectable via the silicone keypad. Please read this manual thoroughly before operating the transmitter. For quick use, please read the "Quick Start" Instructions supplied with your transmitter.

1.2 Features

- The TX100 is designed to be a fully isolated, loop powered pH/mV instrument for two-wire DC applications.

- Can be user-adjusted for specific application span from 0-14pH or -1999mV to + 1999mV.

- Automatic temperature compensation via Pt1000 RTD.

- Instrument supplied in rugged NEMA 4X (IP65) enclosure.

- Built-in programmable sensor cleaning reminder.

- Probe select menu allows user to scale in pH or mV units.

- Calibration Offset menu allows user to calibrate transmitter to match another reference pH meter.

- Several preprogrammed pH buffer selections available for calibration.

1.3 TX100 Specifications

Measuring Range (pH)	0.00 to 14.00pH, 0.01 pH resolution, +/- 0.01 accuracy
Measuring Range (ORP/mV)	-1999mV to 1999mV, 1mV resolution, +/- 2mV accuracy
Measuring Temperature Range	-20 degC to 110 degC /-4 degF to 230degF, 0.1degC/F resolution
Current Output Range	2.00mA to 24mA (4-20mA galvanically isolated) , 0.01mA resolution,+/-0.005mA accuracy
Enclosure	NEMA 4X, IP65, ABS case with silicone keypad HWD: 3.8" (96.52 mm) x 3.8" (96.52 mm) x 2.8" (71.5mm)
Weight	approx. 1lb (.45kg)
Mounting Options	Wall mount, panel mount, pipe mount and DIN rail (rail not included)
Conduit Openings	Standard: 2 - 3/8" openings cordgrips included.
Ambient Temperature	Transmitter Service, 0 degC to 60 degC / 32 degF to 140 degF Sensor Service – Refer to Sensor specifications
Ambient Humidity	0 to 95% (non-condensing)
Location	Designed for non-hazardous areas
Temperature Input	2-wire Pt1000 RTD with automatic compensation
Max. Sensor-to-Transmitter Distance	30 feet (9.1 meters)
Power	12-24 V .DC, 8 amp maximum current

Supply Voltage (V DC)	Max Resistance Load (Ohms)
12	150
16	350
20	550
24	750

EMI/RF	EN 61326-1 CE

1.4 TX100 pH/MV Transmitter - QUICK START GUIDE

a. Refer to Section 2 for installation instructions.

b. Connect electrode to transmitter as shown below.

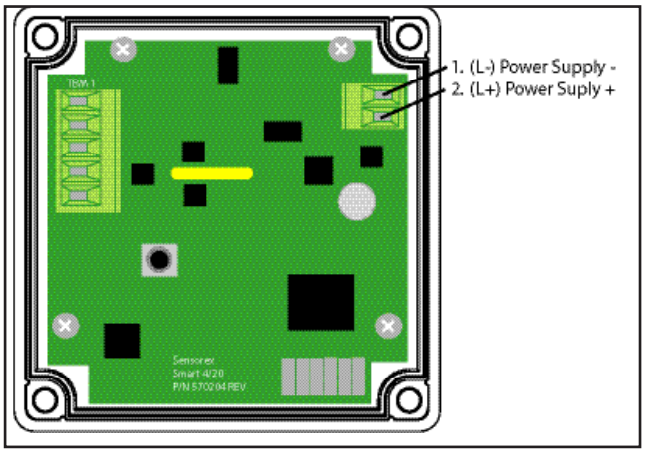

c . Remove front cover from transmitter case by unscrewing four screws in rear corners of transmitter. Connect a 12-24V DC, 8 amp maximum power supply as shown above. See page 6 for resistance load vs. voltage.

d. Transmitter Programming/Setup

The TX100 is supplied with the following preset programming:

Factory Calibrated Values
- pH Manual Offset = 0
- mV Manual Offset = 0

Temperature Manual Offset = 0
Without TC, Default 25°C or 77°F
Range Mode [-] OFF
- Range Mode Lo mV reset to -999 mV
- Range Mode Hi mV reset to 999 mV
- Range Mode Lo pH reset to 0.00
- Range Mode Hi pH reset to 13.99

Hold Mode HLd Lr
Limit Mode O.r. OFF
Clean Probe Timer C.P. OFF

To change any of these parameters, please refer to the specific section in this manual (See Table of Contents).

e. If installed electrode is pH, move to step f.
If ORP/mV electrode is installed see Section 9.1 for Probe Selection programming.

f. Temperature Calibration is done at the factory before shipping. For temperature recalibration follow steps shown in Section 9.8.

g. Factory preset temperature units are ^{O}C. To change to ^{O}F, follow instructions in Section 9.9.

h. For pH, perform Two-Point pH calibration as outlined in Section 8.2.
First buffer is pH 7.00 or 6.86 (NIST), second buffer choices are 4.01, 10.00 or 9.18 (NIST). A two-point calibration must be performed. Three-point calibration is not necessary with the TX100.

Part 2 Transmitter Mounting

2.1 Cord Grip Installation

Turn transmitter upside down with display facing you. Punch out either one or two conduit knockouts with a small hammer and punch as shown below for cord grip mounting. Ensure back cover is installed to provide mechanical support for the enclosure walls. BE CAREFUL NOT TO DAMAGE THE INTERNAL ELECTRONICS OR CRACK THE TRANSMITTER CASE while performing this action.

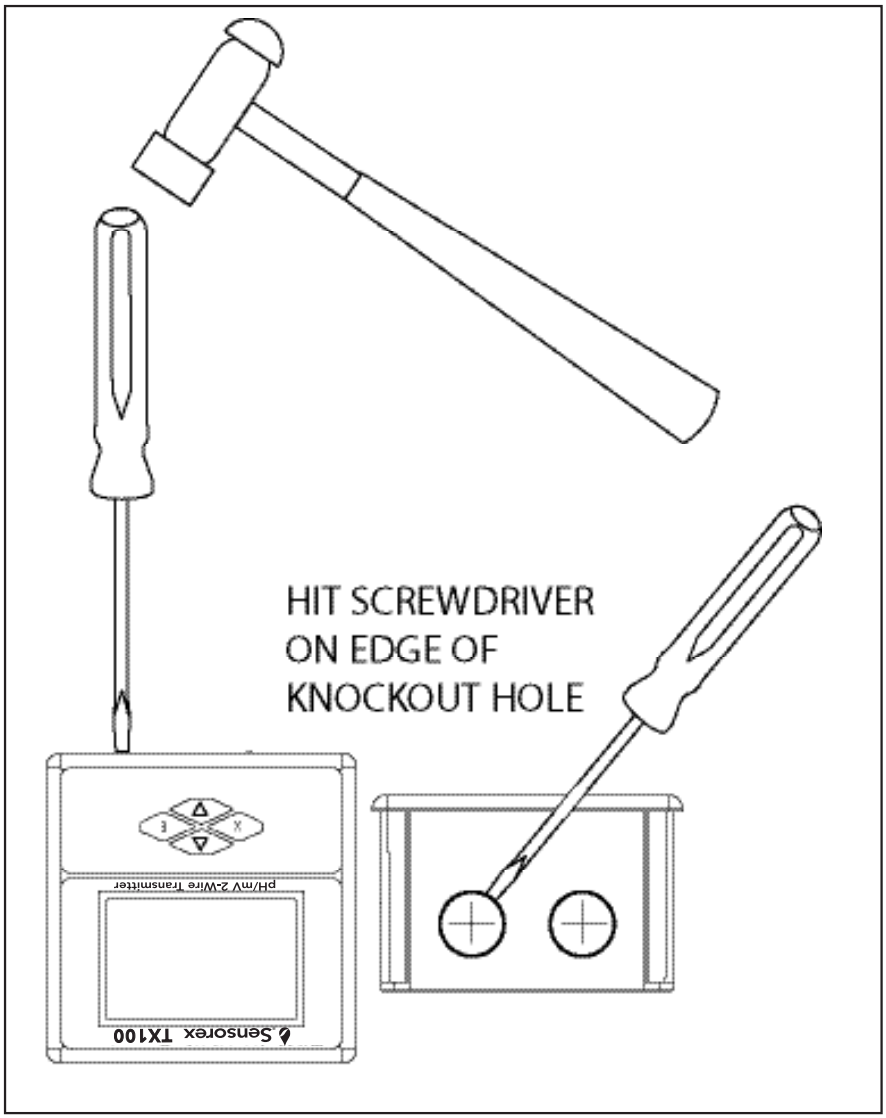

Figure 2.1

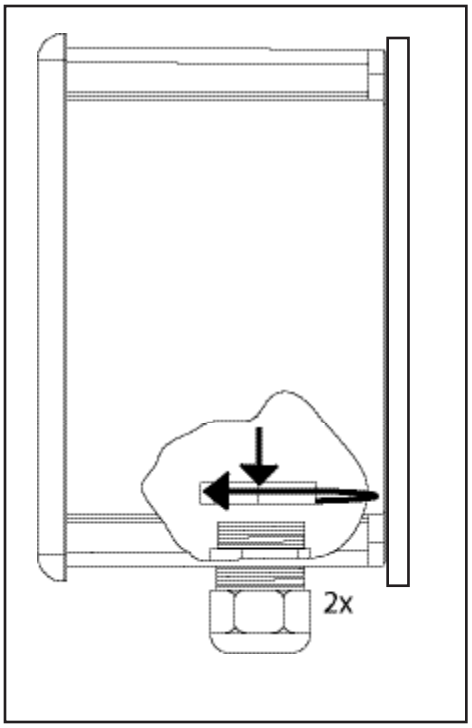

Figure 2.2

2.2 Wall Mounting

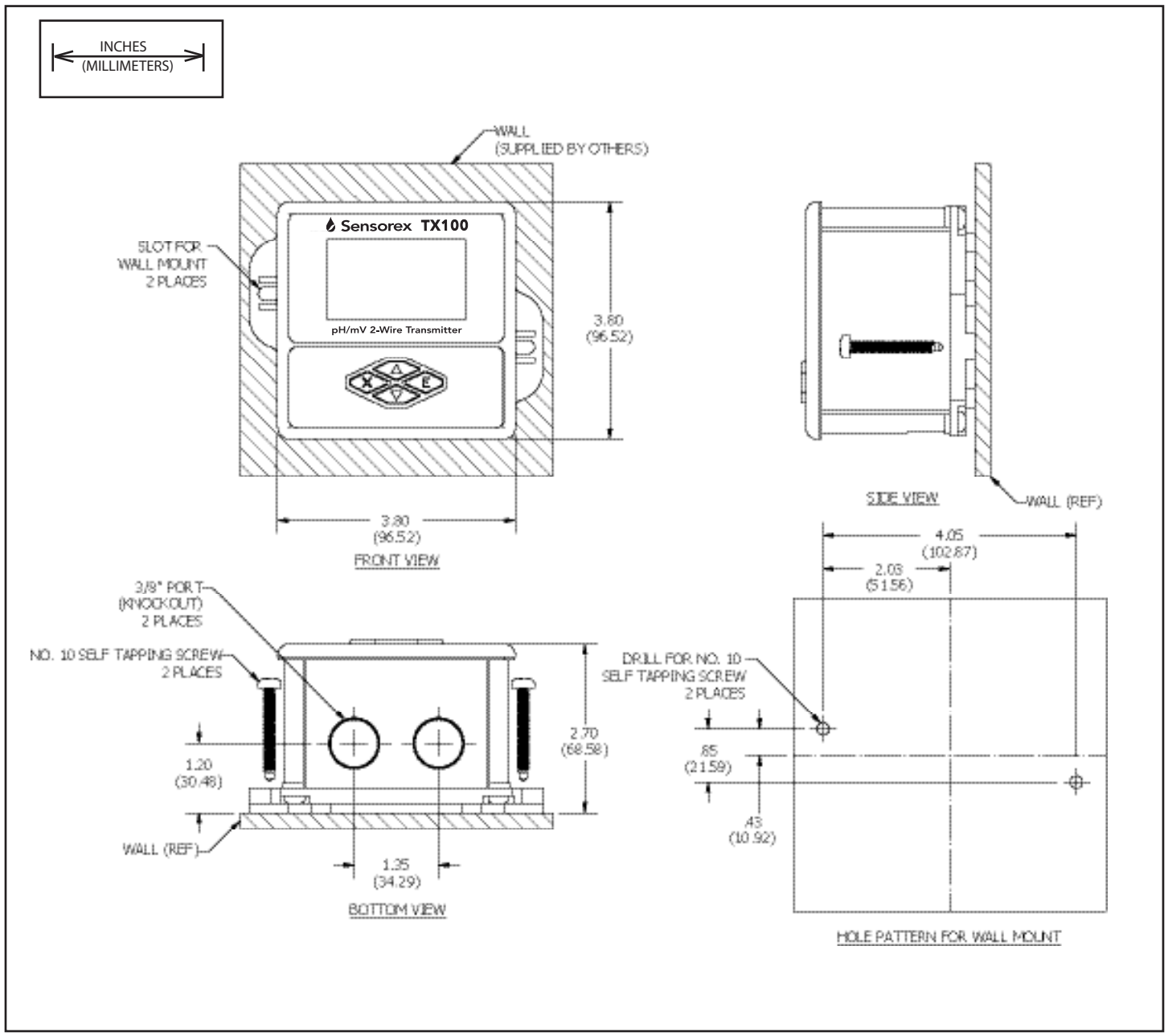

Figure 2.3

2.3 Panel Mounting

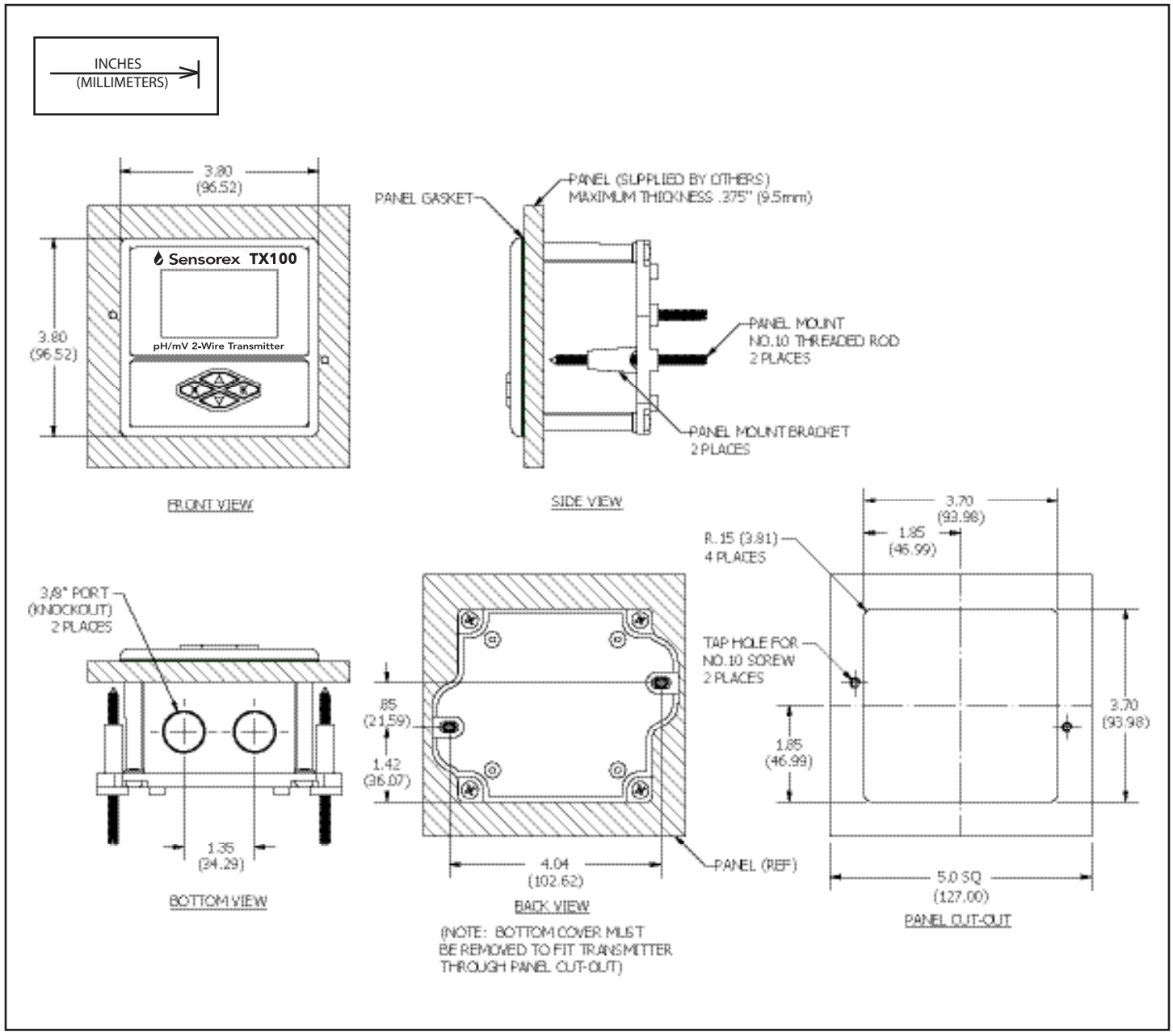

Figure 2.4

2.4 DIN Rail Mounting

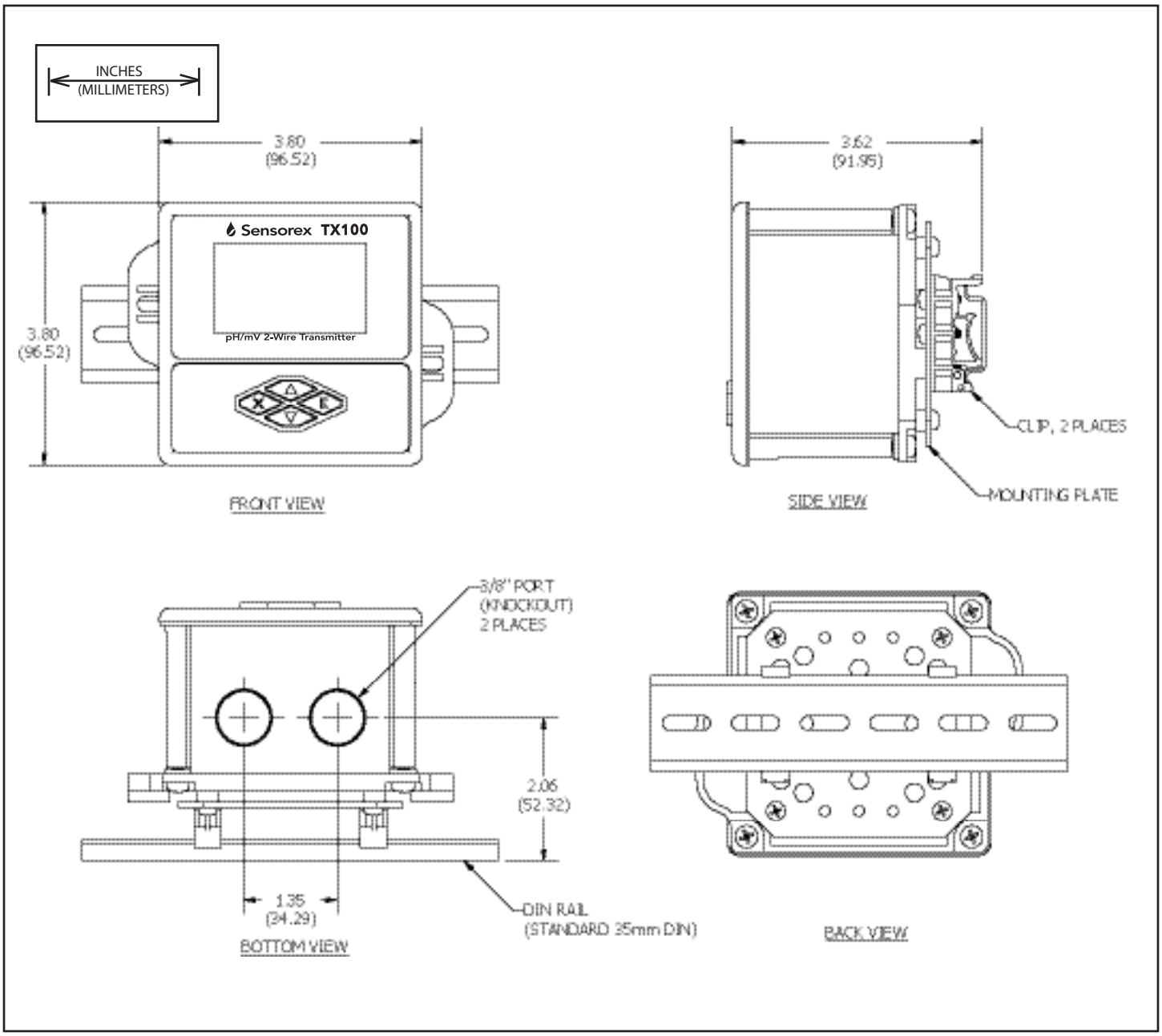

Figure 2.5

2.5 Pipe Mounting

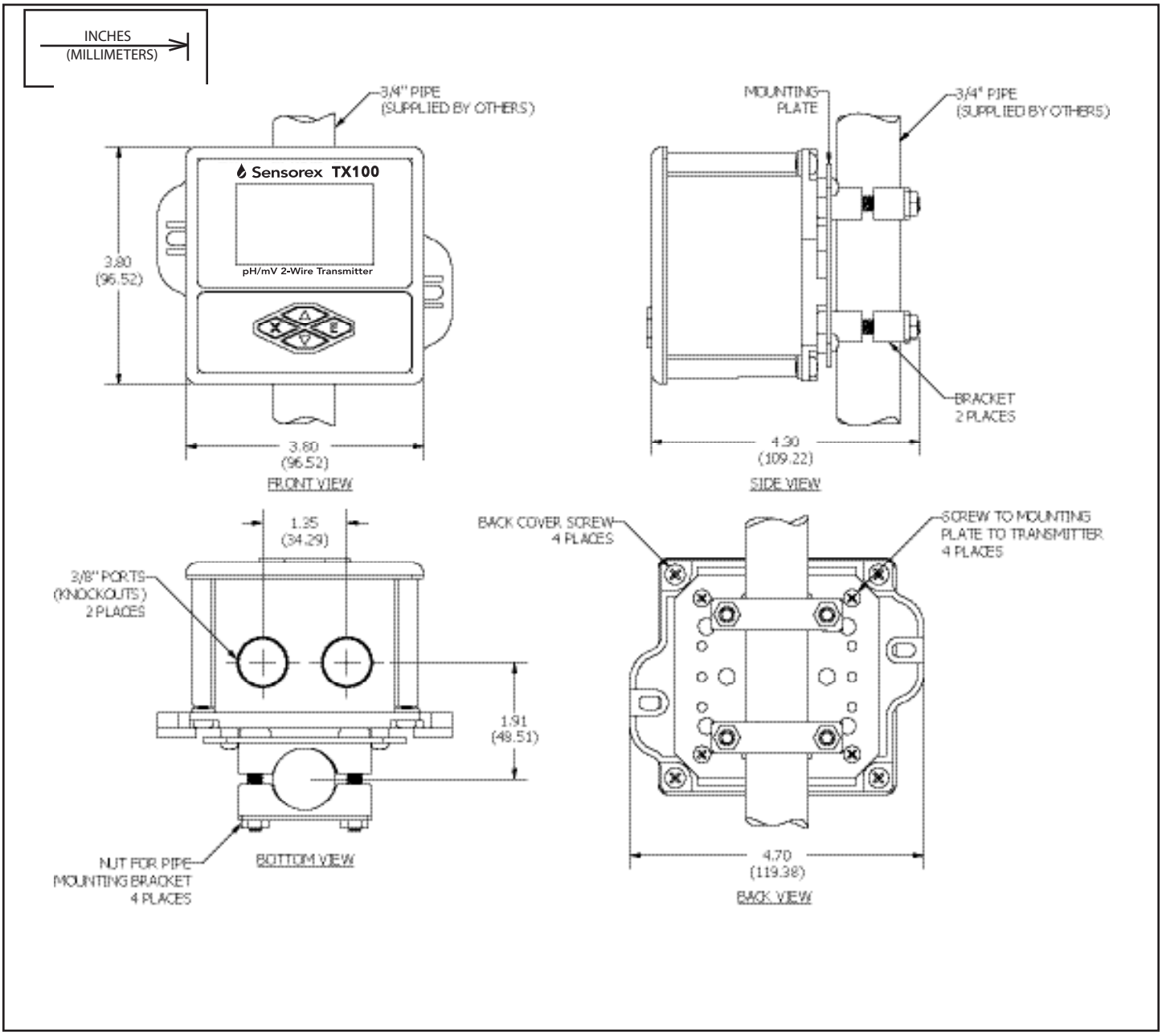

Figure 2.6

Part 3 Sensor Mounting

3.1 General

Select a location within the maximum sensor cable length (30 ft) for mounting of the sensor flow cell. If there is more than 30 ft distance from the electrode to the transmitter, you should purchase a battery-powered preamplifier model PHAMP-1, or use an amplified pH or ORP electrode. Locate sensor away from pumps, adjustable frequency drive systems, or other sources of high frequency EMI if possible. Refer to the installation manual for your electrode for mounting requirements.

Part 4 Transmitter Electrical Installation

4.1 General

The TX100 loop-powered instrument is a 12-24 VDC loop-powered pH/mV transmitter.

WARNING: Do not connect AC line power to the 2-wire module. Severe damage will result.

Important Notes:

1. Use wiring practices that conform to all national, state, and local electrical codes.
2. DO NOT run sensor cables or instrument 4-20 mA output wiring in the same conduit that contains AC power wiring. AC power wiring should be run in a dedicated conduit to prevent electrical noise from coupling with the instrumentation signals.
3. DO NOT remove dessicant pack from inside transmitter case. This is necessary to control moisture.

4.2 Power

A12-24VDC power supply, eight amp maximum current must be used to power the instrument. See chart below for Maximum load. The exact connection of this power supply is dependent on the control system into which the instrument will connect. See Figure 4.1 for further details. Any twisted pair shielded cable can be used for connection of the instrument to the power supply. Route signal cable away from AC power lines, adjustable frequency drives, motors, or other noisy electrical signal lines. Do not run sensor or signal cables in conduit that contains AC power lines or motor leads. The TX100 is supplied with a lightning protective component.

Note: Terminal block labels for power, electrode and temperature sensor connections are marked on the PCB next to their respective terminal.

Supply Voltage(V DC)	Max Resistance Load (Ohms)
12	150
16	350
20	550
24	750

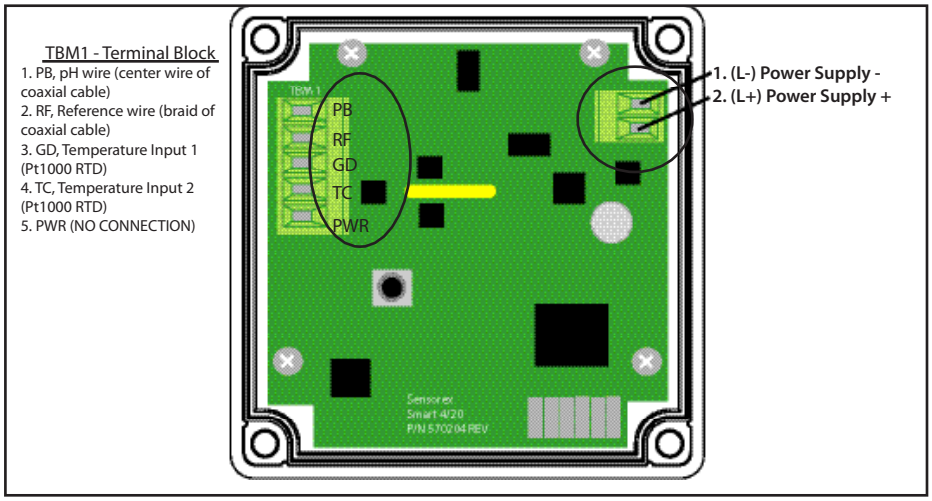

Figure 4.1

Part 4 Transmitter Electrical Installation

4.3 4-20mA loop connection to PLC or other 4-20mA load device

Install loop wiring as shown below in diagram 4.1A, paying particular attention to maximum resistance load shown in the chart. Note that PLC or 4-20mA device and power supply are customer supplied components.

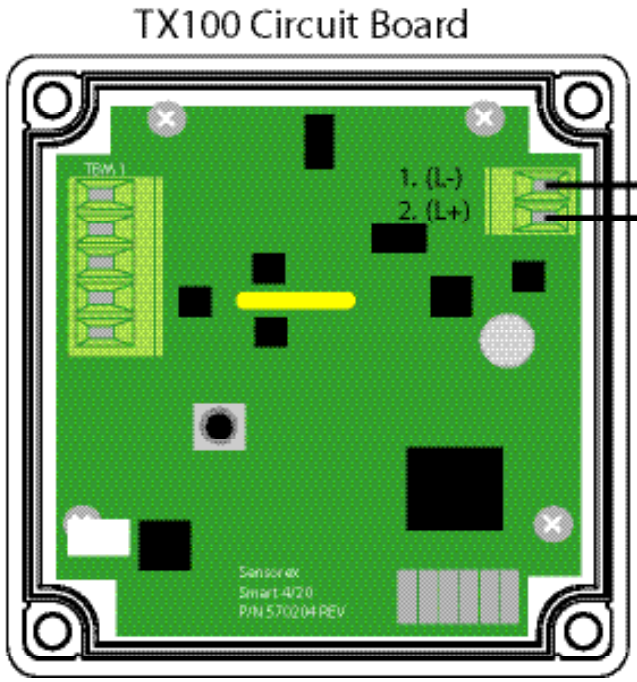

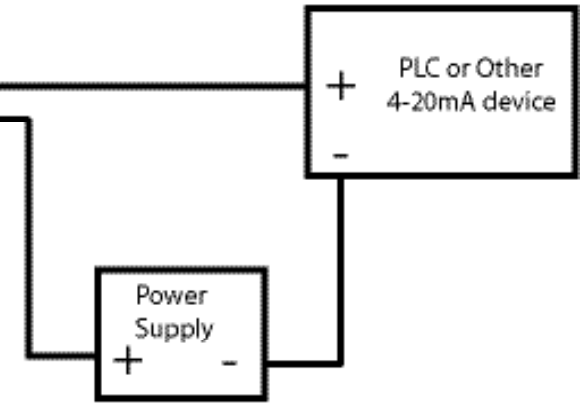

Supply Voltage(V DC)	Max Resistance Load (Ohms)
12	150
16	350
20	550
24	750

Figure 4.1A

Part 5 Electrode Electrical Connection

5.1 General

The electrode cable can be quickly connected to the TX100's terminal strip by matching the wire colors on the cable conductors. Route signal cable away from AC power lines, adjustable frequency drives, motors, or other noisy electrical signal lines. Do not run sensor or signal cables in conduit that contains AC power lines or motor leads.

5.2 Direct Sensor Connection

The sensor cable can be routed into the enclosure through one of the provided cord-grip retainers, or through a properly sized conduit connection. Connect electrode wires as shown below.
If the cord-grip devices are used for sealing the cable, ensure the cord-grips are snugly tightened after electrical connections have been made to prevent moisture incursion.

Note: Terminal block labels for power, electrode and temperature sensor connections are marked on the PCB next to their respective terminal.

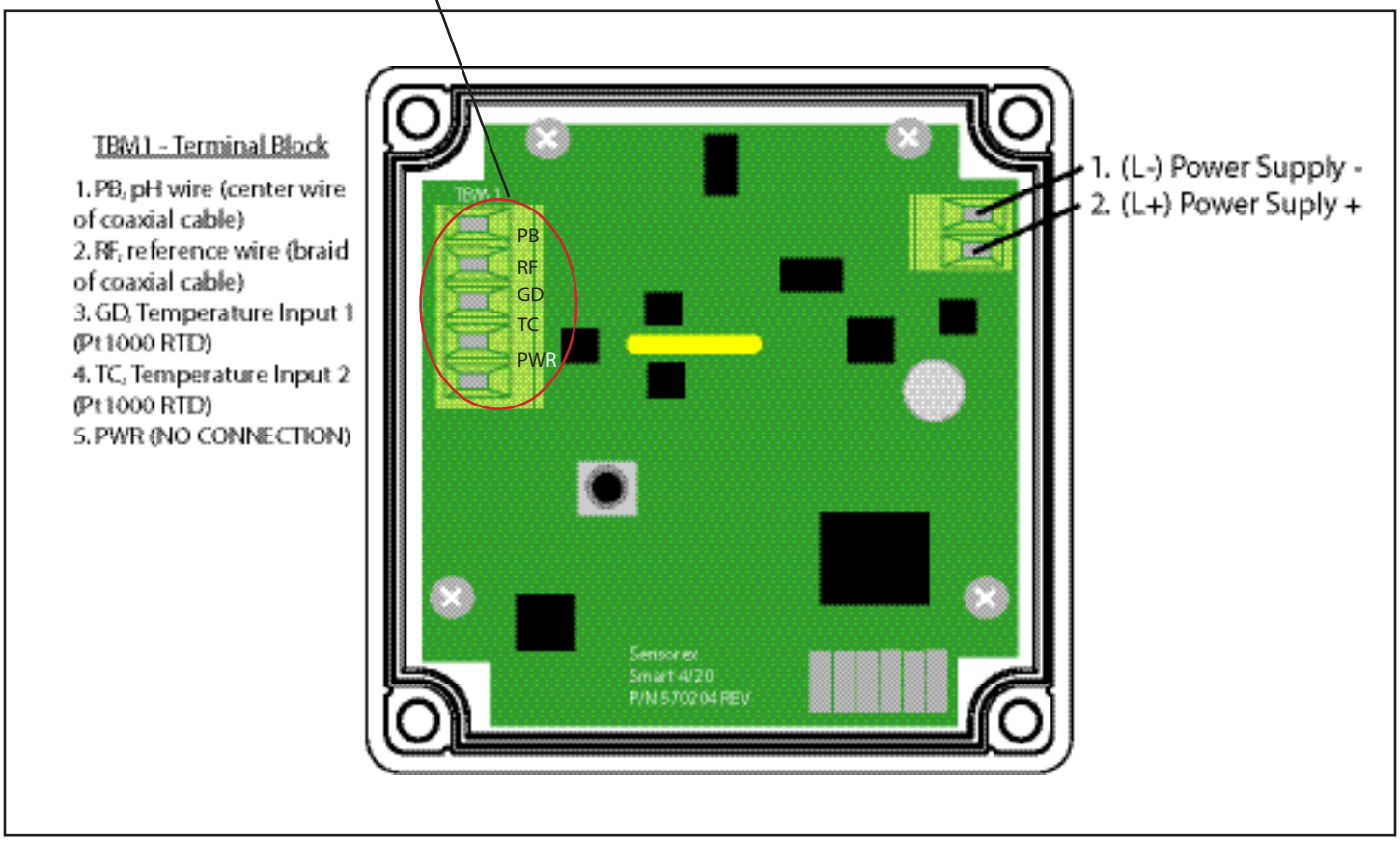

Figure 5.1

Part 6 Keypad Function and LCD

6.1 Keypad

The TX100 keypad is designed for ease-of-use. See graphic below for keypad function.

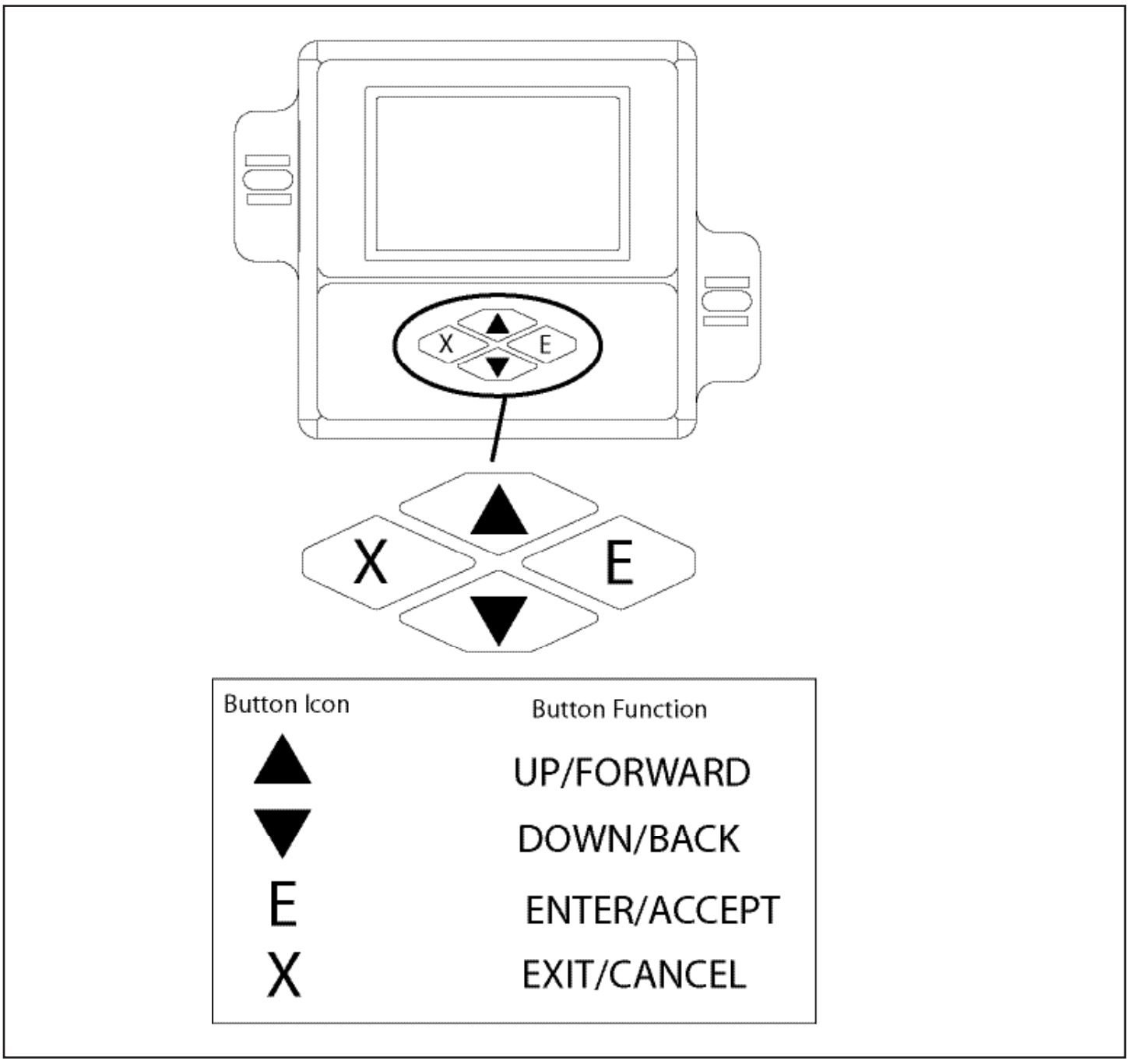

Figure 6.1

6.2 LCD Screen

The TX100's LCD display contains a number of useful indicators which let the user know which mode is active. In addition, all values to be changed will flash. The silicone keypad is designed for ease-of-use. See graphic below for display features.

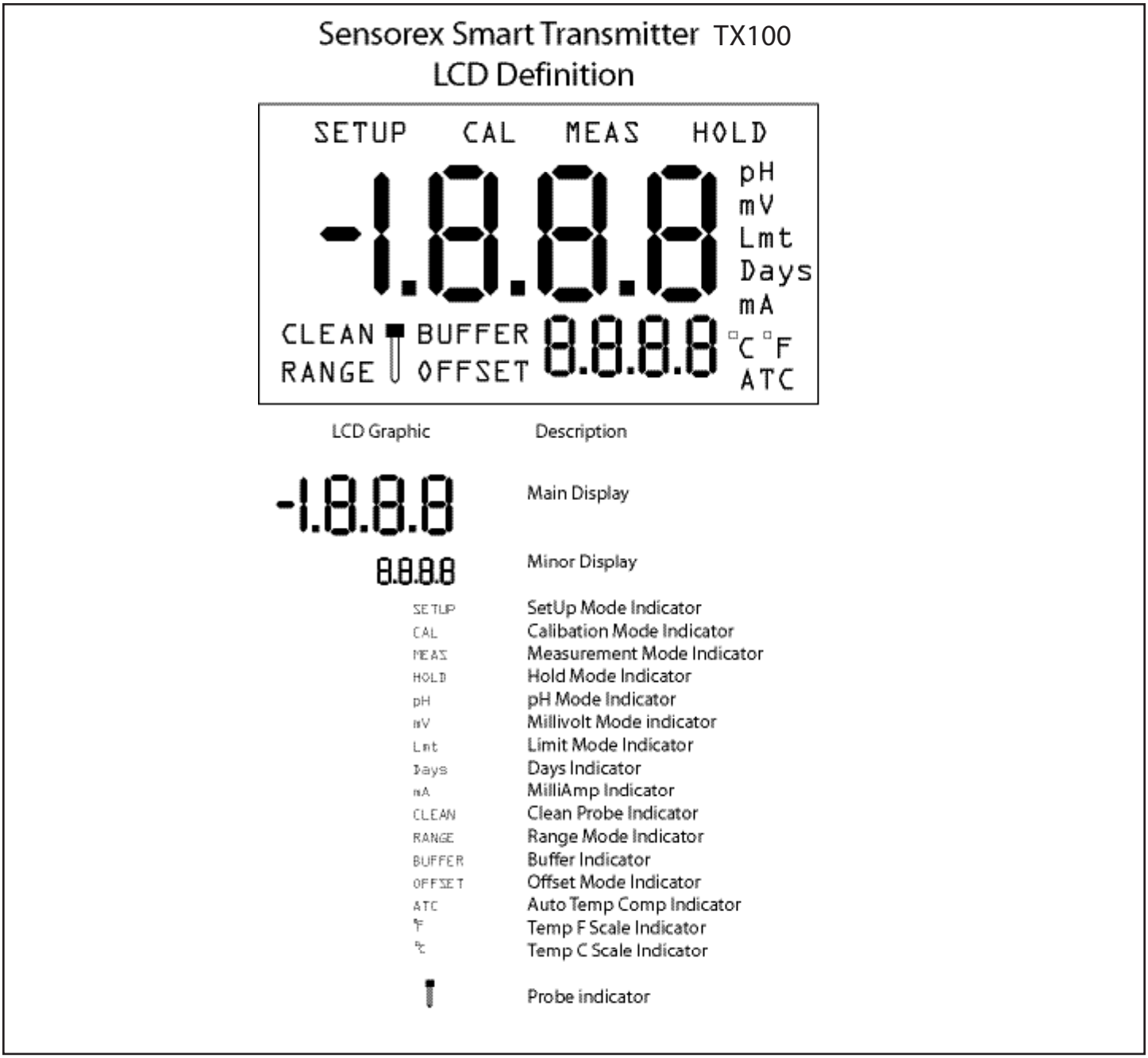

Figure 6.2

Part 7 Programming Menu

7.1 Menu

The TX100 pH/ORP transmitter menu flow chart below shows a quick view of navigation basics. For detailed submenu programming, please refer to the appropriate menu subsection.

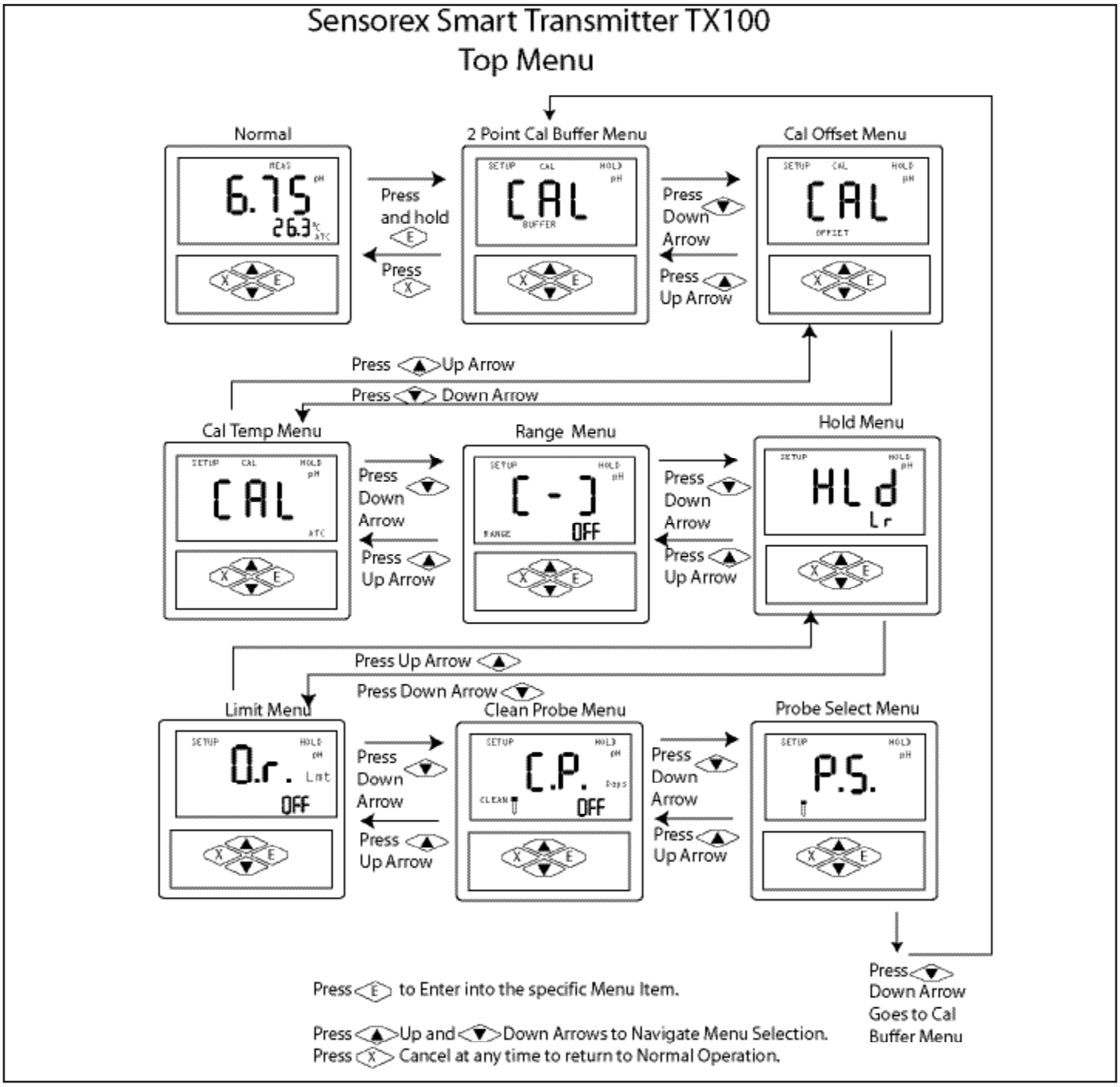

Figure 6.3

Part 8 Calibration

8.1 Getting Started

Before pH and temperature calibration is possible, some preparation is necessary. First, make sure you are in the proper measurement mode. The measurement mode is shown on the display in the upper right corner "pH" for pH and "mV" for ORP or other mV sensors.

Ensure the sensor is connected to the transmitter as shown in Part 5.1.

Always use fresh buffer solutions when calibrating. Check expiration date on buffer package.

If possible, use deionized water to rinse electrode before calibration and between buffers.

For temperature calibration, make sure the temperature sensor wires are connected as shown in FIG 5.1. If no temperature sensor is connected, the transmitter will default to read 25.0 degrees C or 77.0 degrees F.

8.2 2-Point pH Calibration

The TX100 performs two-point calibrations using preprogrammed buffer choices. No mV calibration is required. See Figure 8.1 for calibration programming.

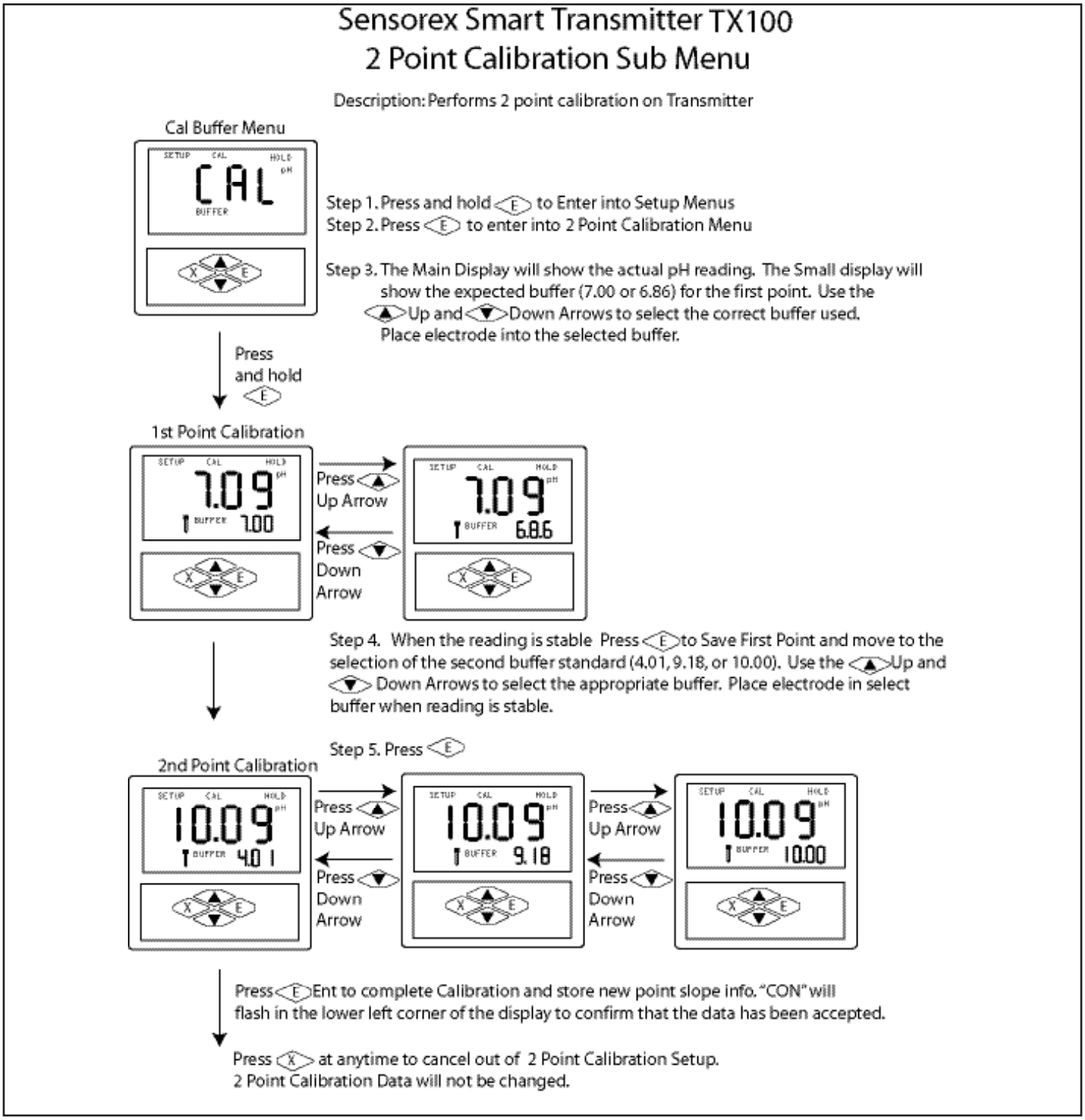
Sensorex Smart Transmitter TX100
2 Point Calibration Sub Menu
Description: Performs 2 point calibration on Transmitter
Cal Buffer Menu
CAL
BUFFER
Step 1. Press and hold E to Enter into Setup Menus
Step 2. Press E to enter into 2 Point Calibration Menu
Step 3. The Main Display will show the actual pH reading. The Small display will show the expected buffer (7.00 or 6.86) for the first point. Use the Up and Down Arrows to select the correct buffer used. Place electrode into the selected buffer.
Press and hold E
1st Point Calibration
7.09
BUFFER 7.00
Press Up Arrow
Press Down Arrow
7.09
BUFFER 6.86
Step 4. When the reading is stable Press E to Save First Point and move to the selection of the second buffer standard (4.01, 9.18, or 10.00). Use the Up and Down Arrows to select the appropriate buffer. Place electrode in select buffer when reading is stable.
Step 5. Press E
2nd Point Calibration
10.09
BUFFER 4.01
Press Up Arrow
Press Down Arrow
10.09
BUFFER 9.18
Press Up Arrow
Press Down Arrow
10.09
BUFFER 10.00
Press E Ent to complete Calibration and store new point slope info. "CON" will flash in the lower left corner of the display to confirm that the data has been accepted.
Press X at anytime to cancel out of 2 Point Calibration Setup.
2 Point Calibration Data will not be changed.

Figure 8.1

8.3 Temperature Calibration

This menu allows the user to select temperature units of measure and to calibrate the temperature displayed on the T100's screen to match another sensor or thermometer. This menu is only available in pH mode (See Probe Select menu for details)

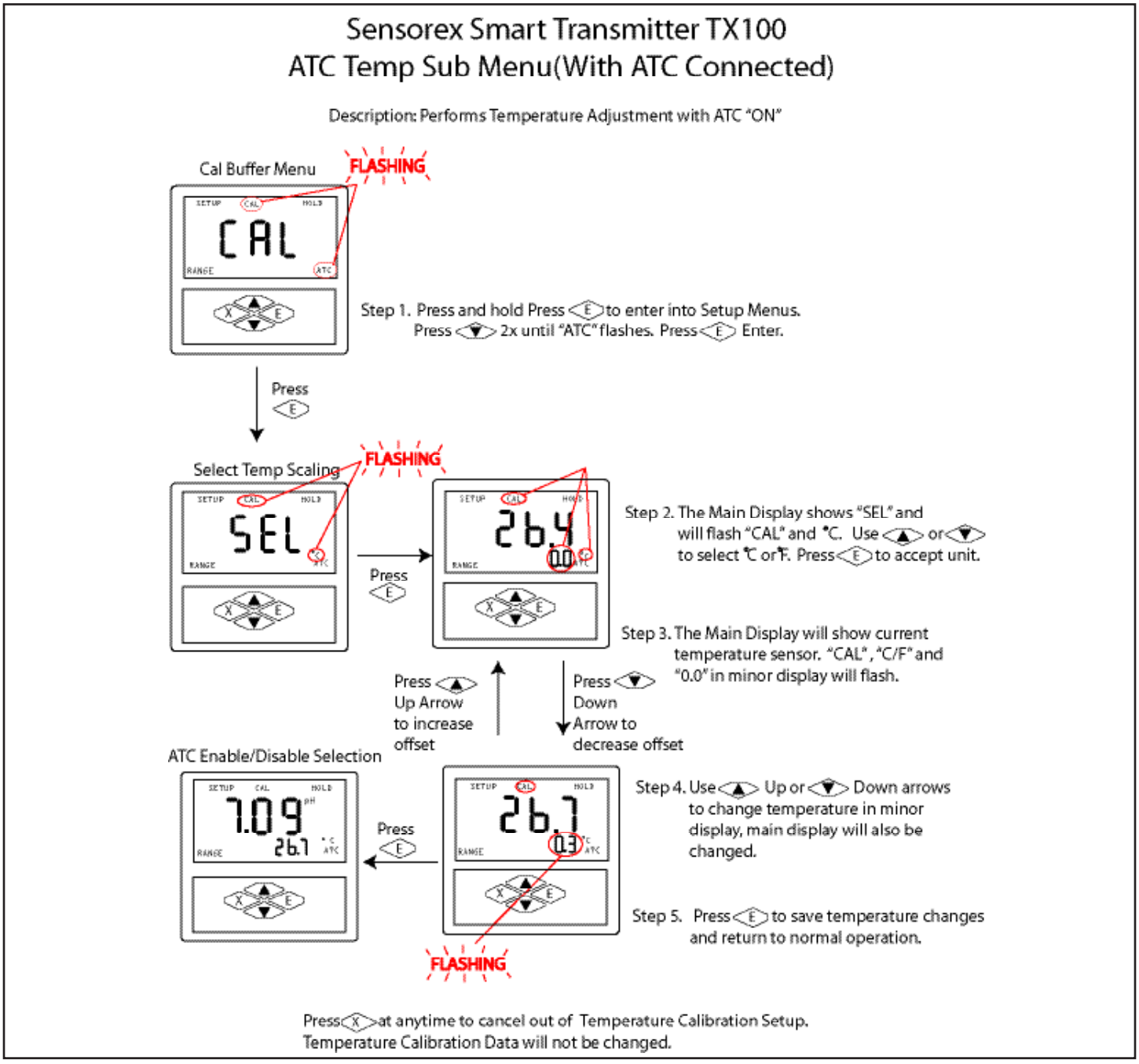

Figure 8.2

9.1 Probe Select Menu

Allows for selection of pH or ORP (mV) sensor. Menu is preset to "pH" from factory.

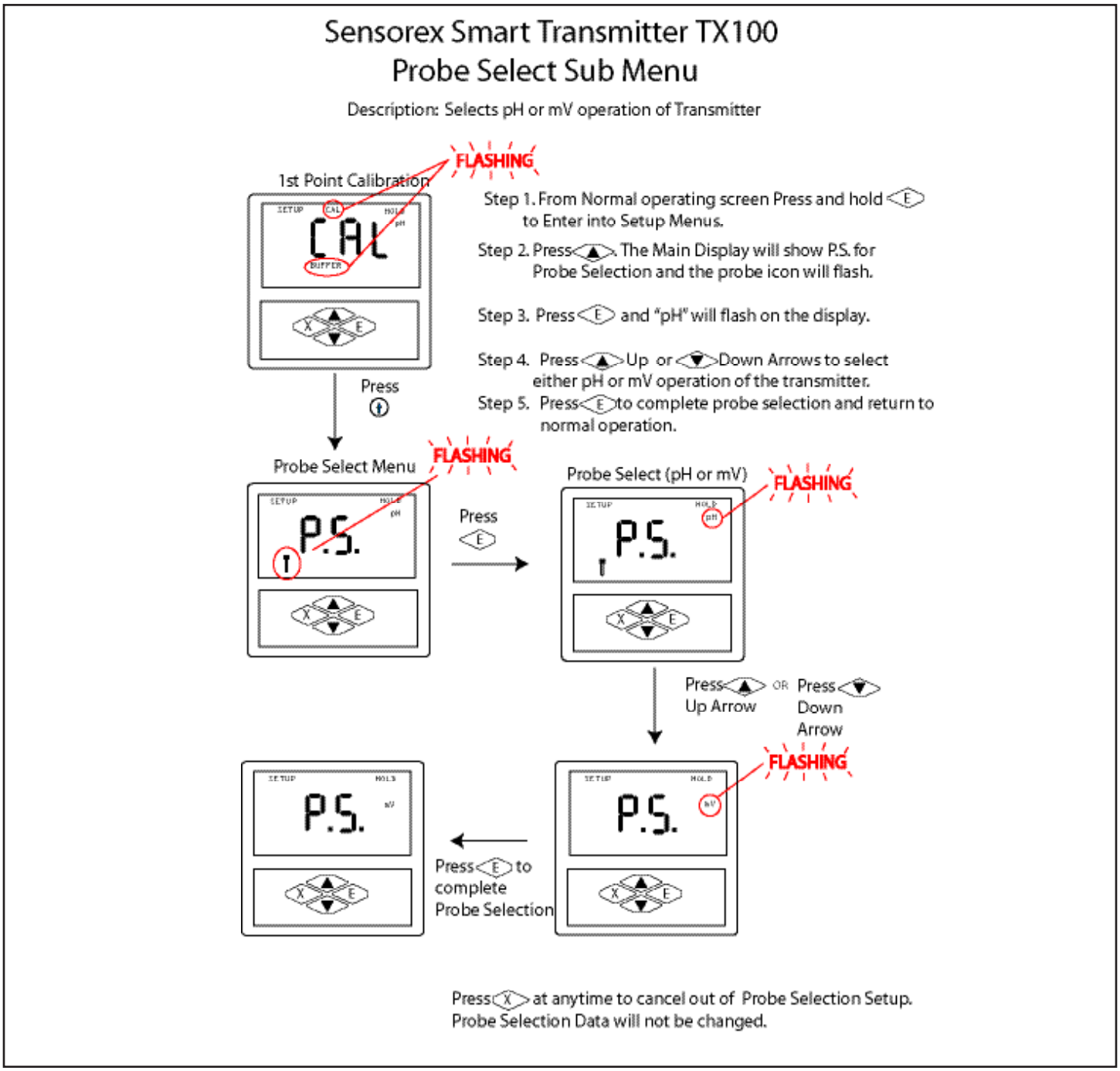

Figure 9.1

9.2 Calibration Offset

This mode allows the user to offset the current calibration by up to 2.00 pH units to make it equal to the calibration/reading of another meter.

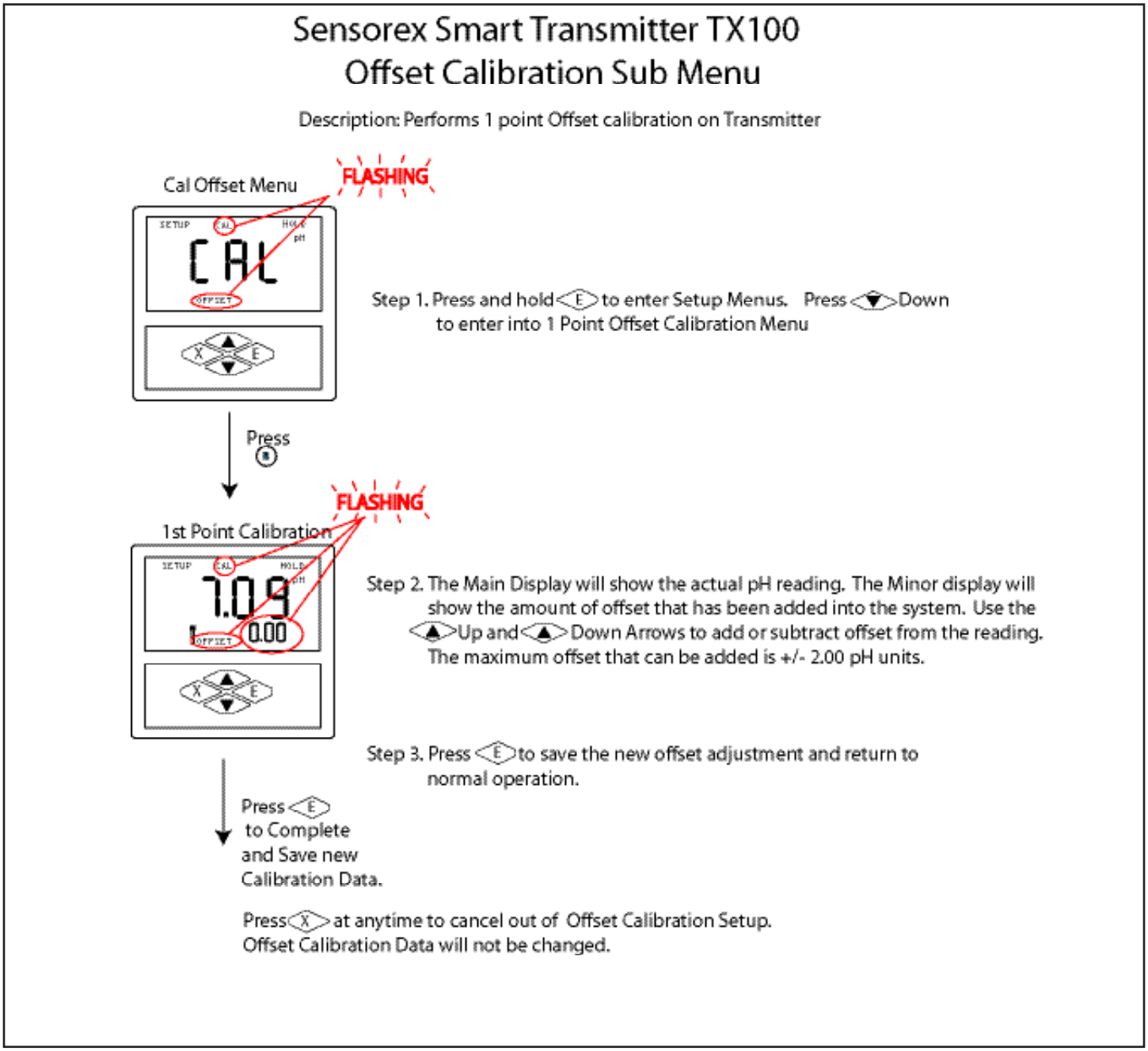

Figure 9.2

9.3 Range Menu

This calibration mode allows the user to define the pH values equal to 4.0 and 20.0mA. The factory preset Values are 0.0 pH for 4.0mA and 14.0pH for 20mA.

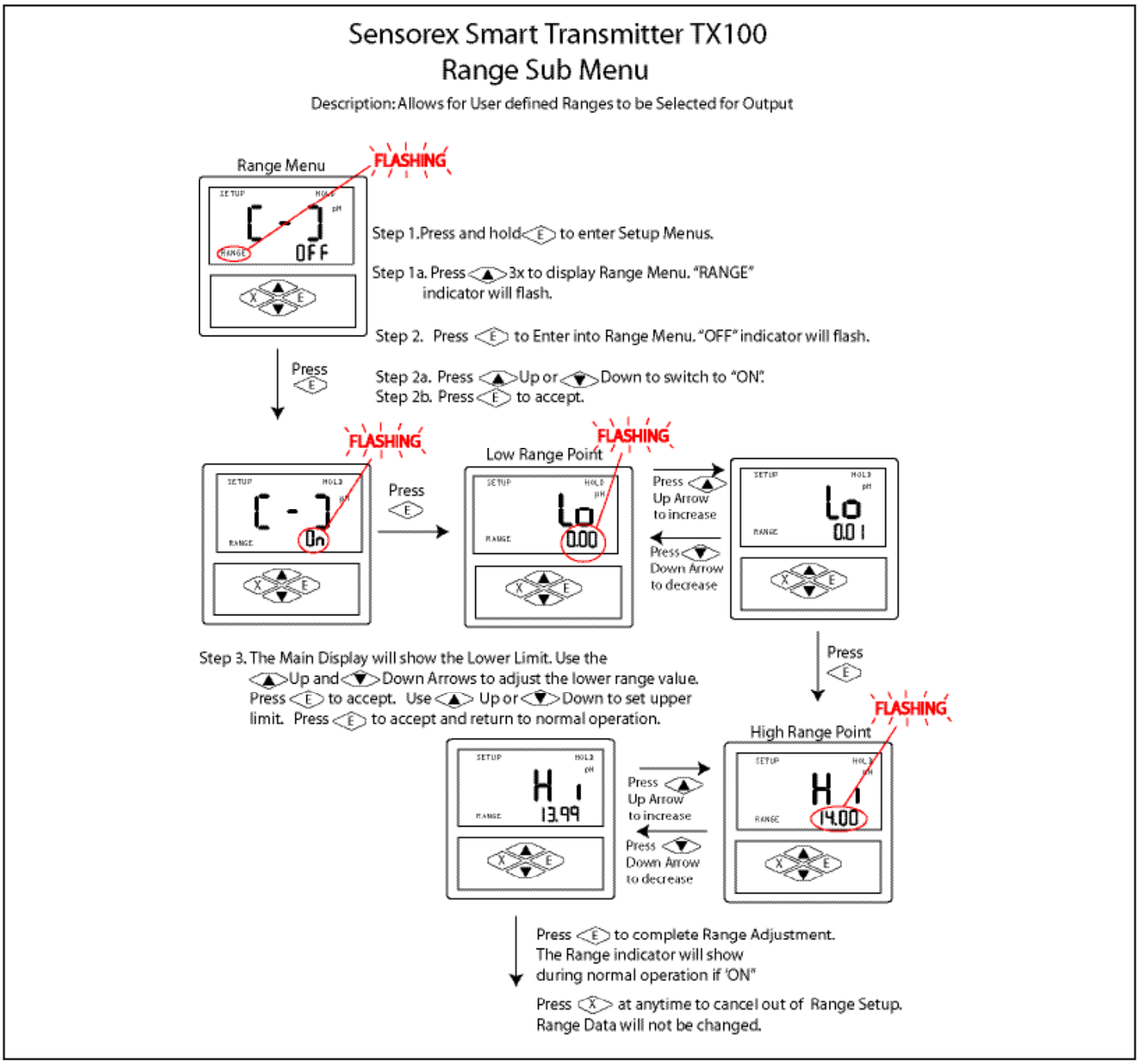

Figure 9.3

9.4 Limit Menu

This calibration mode allows the user to turn off or on the current output limit.

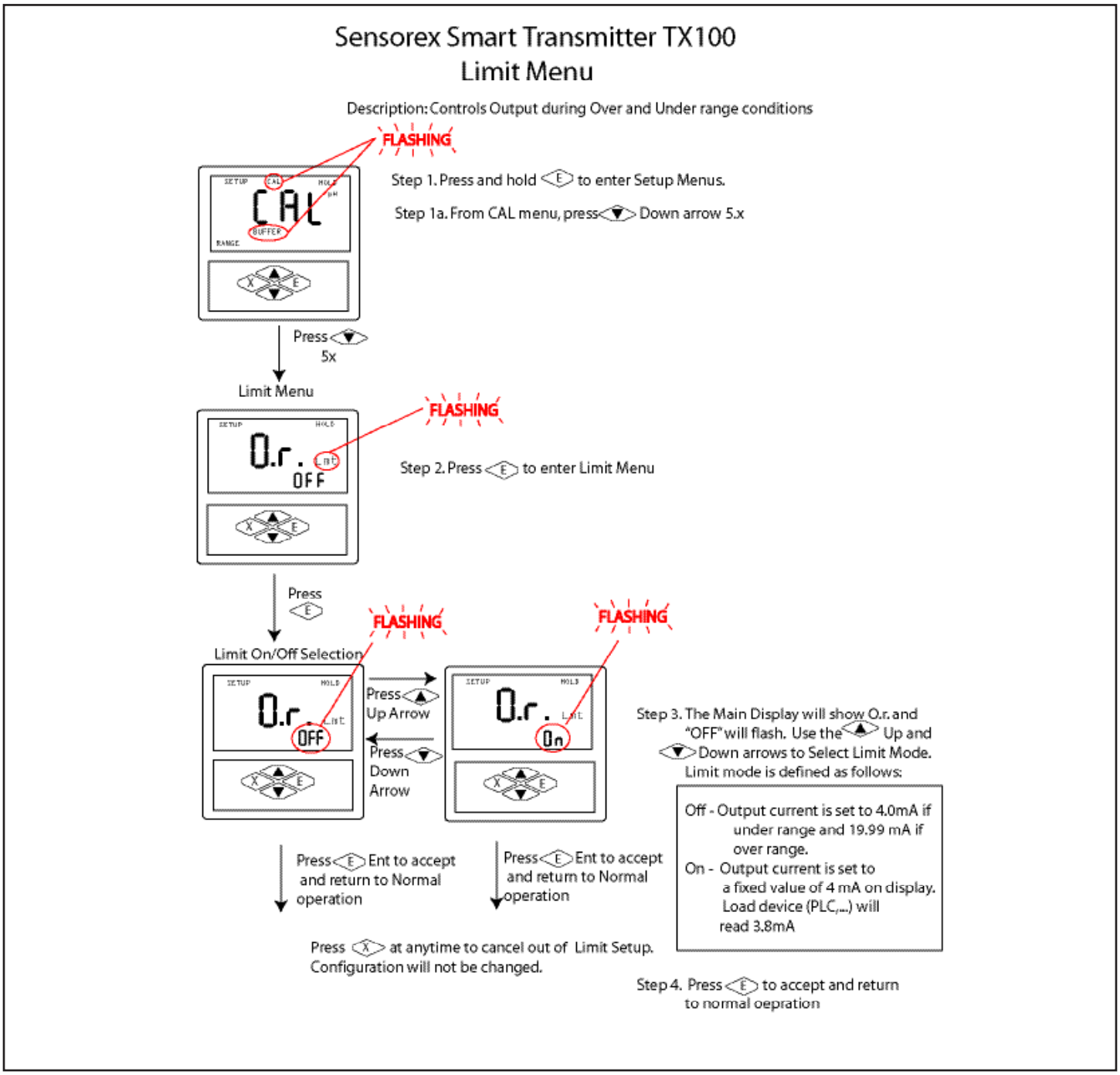

Figure 9.4

9.5 Hold Menu

Controls output during transmitter setup.

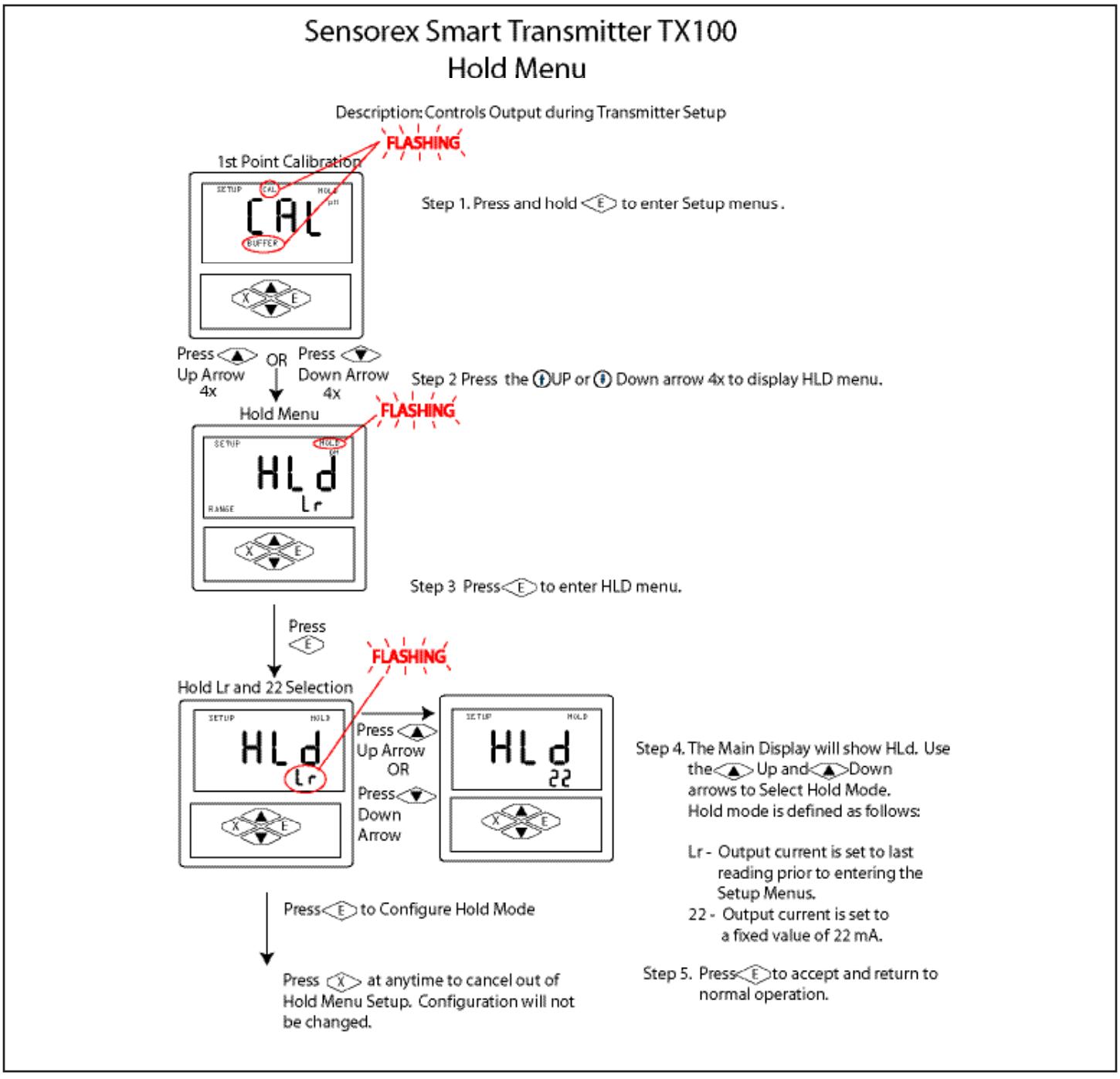

Figure 9.5

9.6 Clean Probe Menu

This menu allows the user to set a visual reminder to clean the probe. The reminder can be set to within 1-250 days. Once the timer has expired the clean probe icon will flash on the screen. Flashing probe icon is disabled by setting clean probe menu OFF.

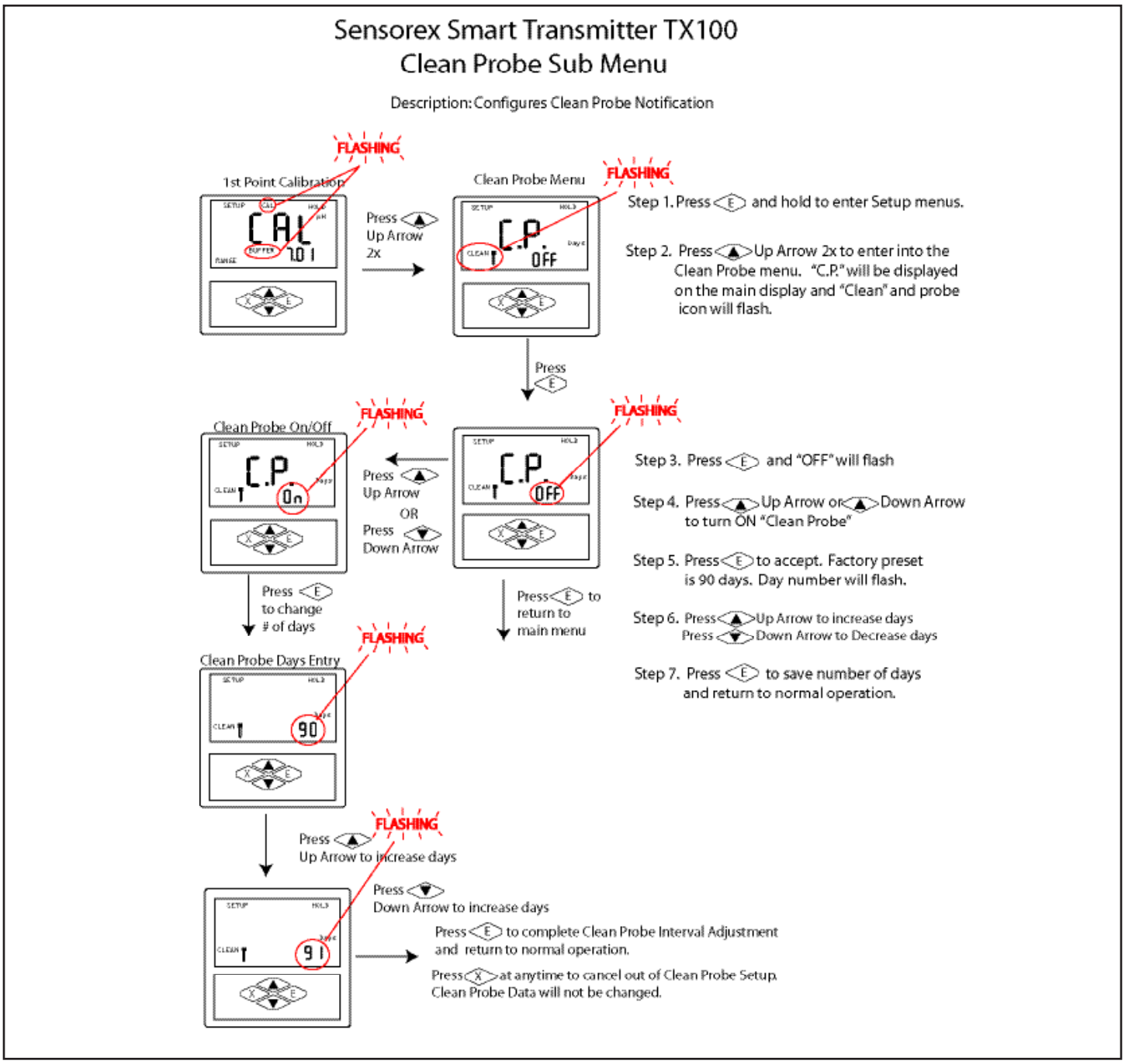

Figure 9.6

9.7 Factory Reset Menu

This menu allows the user to reset all programmed settings back to the factory defaults.

Factory Reset Values	
pH Slope and Offset values reset to Ideal mV Slope and Offset values reset to Factory Calibrated Values pH Manual Offset reset to 0 mV Manual Offset reset to 0 Temperature Manual Offset reset to 0 Without TC, Default 25oC or 77oF	Range Mode [-] OFF Range Mode Lo mV reset to -999 mV Range Mode Hi mV reset to 999 mV Range Mode Lo pH reset to 0.00 Range Mode Hi pH reset to 13.99 Hold Mode HLd Lr Limit Mode O.r. OFF Clean Probe Timer C.P. OFF

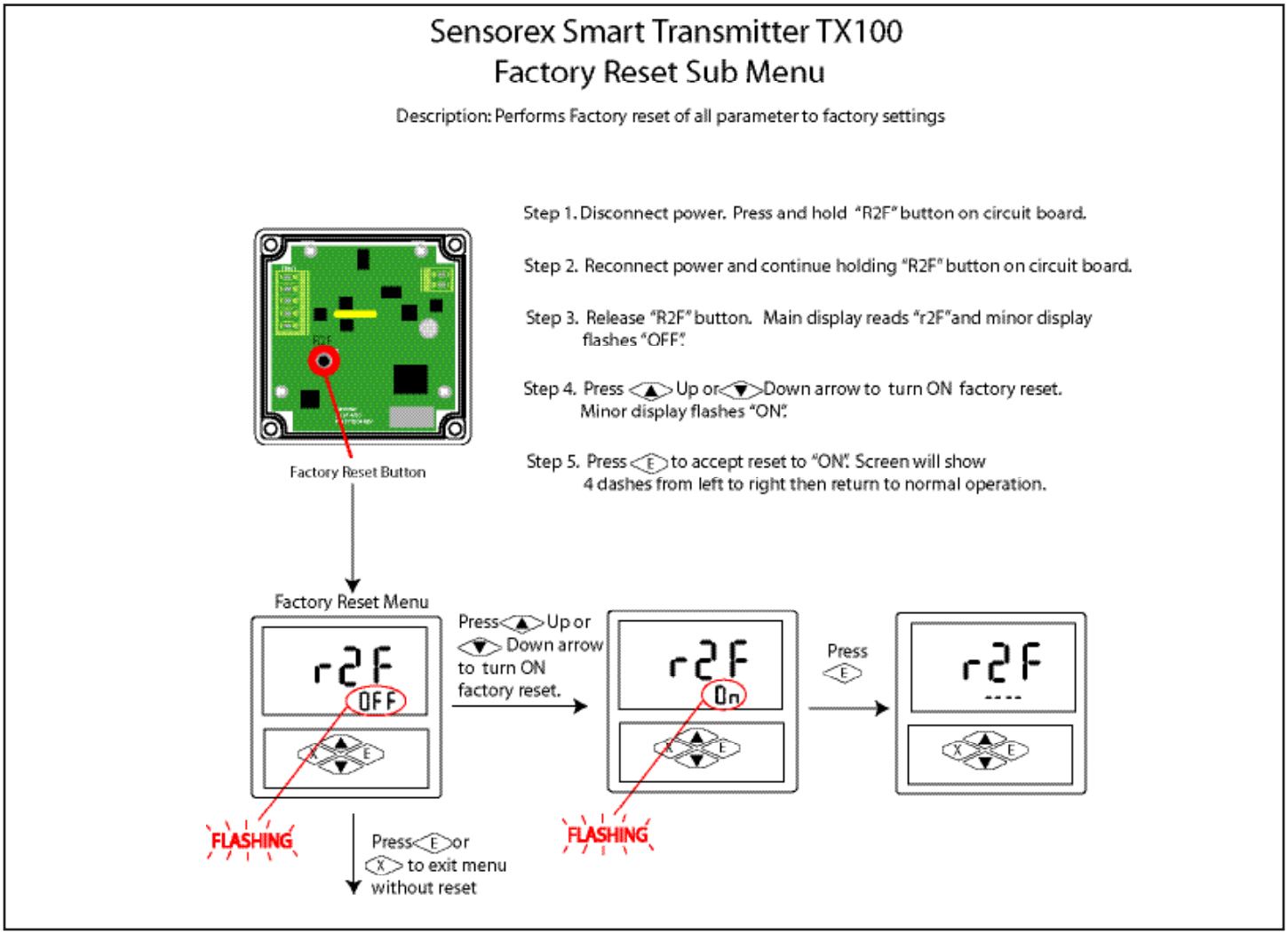

Figure 9.7

9.8 Manual Temperature Compensation

This menu allows the user to set the temperature displayed on the screen (when a temperature sensor is not attached) for temperature compensation.

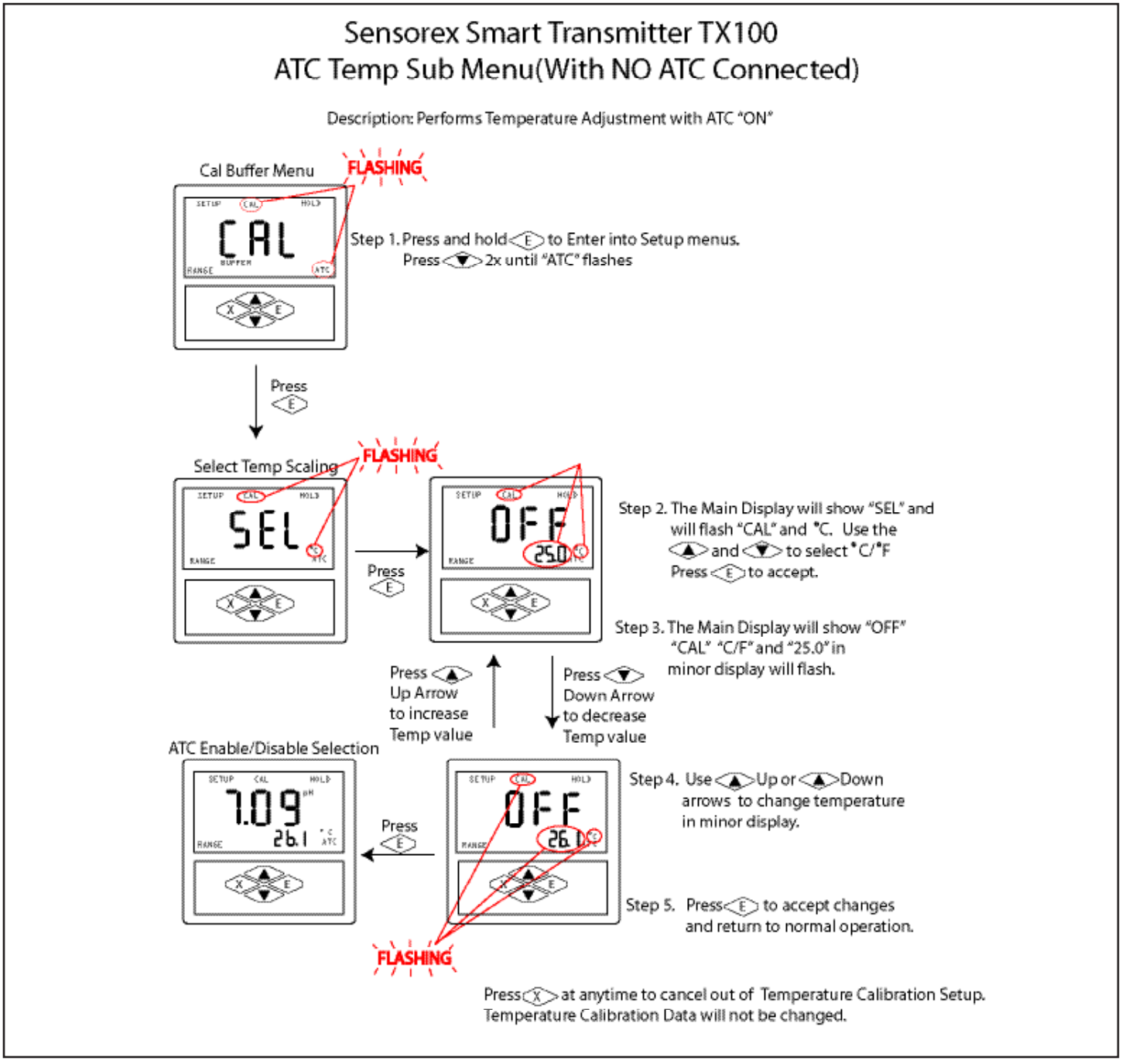

Figure 9.8

9.9 Temperature Unit Menu

This menu permits selection of either deg C or deg F.

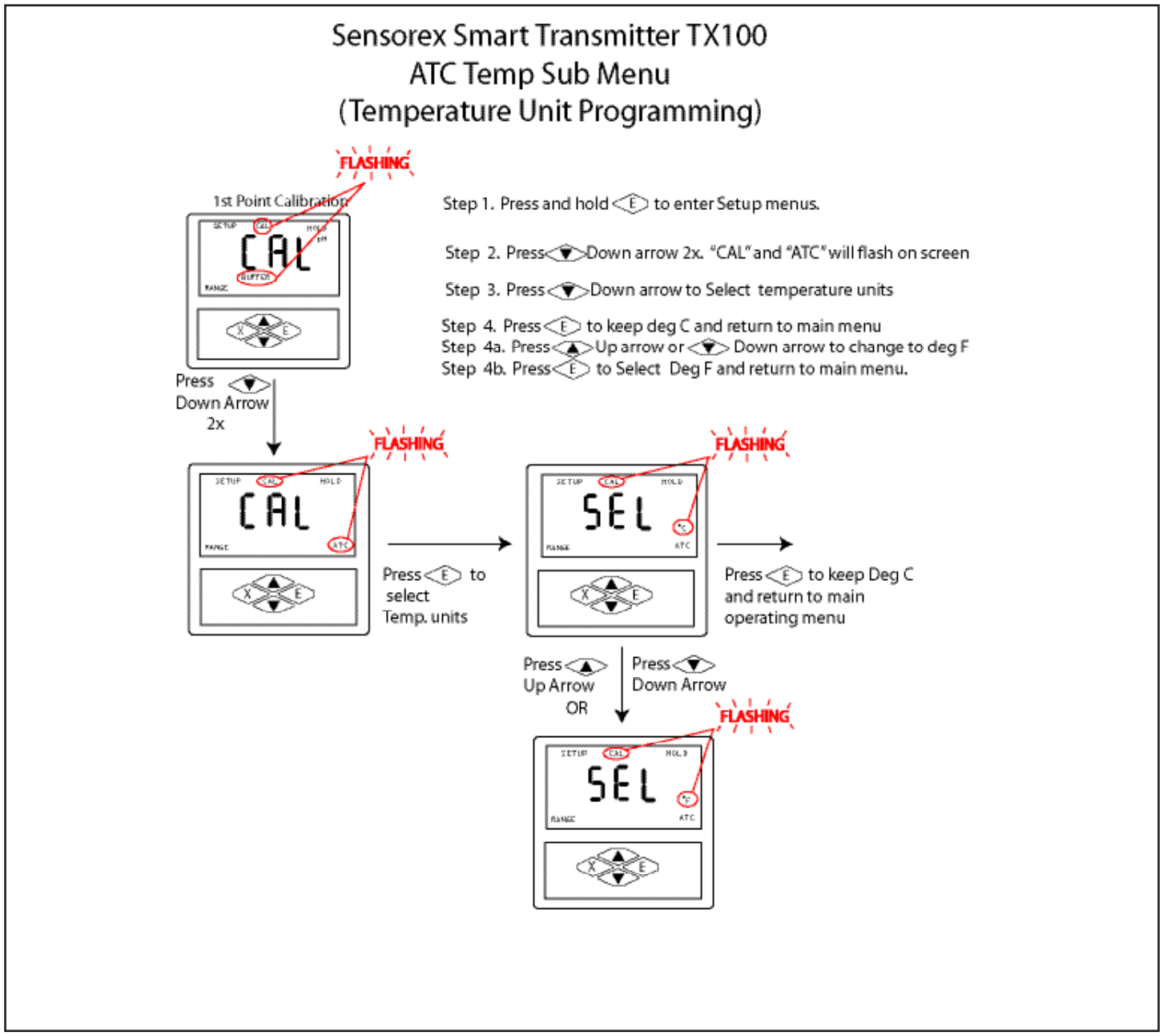

Figure 9.9

Part 10 Troubleshooting

10.1 General

The information included in this section is intended to be used to quickly resolve an operational problem with the system. During any troubleshooting process, it will save time if the operator can first determine if the problem is related to the transmitter, electrode, or some external source. Therefore, this section is organized from the approach of excluding any likely external sources, isolating the transmitter, and finally isolating the electrode. If these procedures still do not resolve the operational problems, any results noted here will be very helpful when discussing the problem with the factory technical support group.

10.2 Troubleshooting Guidelines

To begin this process, review the connections of the system to all external connections:

1. Verify the proper power input is present (12-24V DC, 8 amp maximum). Ensure the loads on the 4-20 mA outputs do not exceed the limit (See Section 4.2) .
2. Do not run sensor cables or analog output wiring in the same conduits as power wiring. If low voltage signal cables must come near power wiring, cross them at 90° to minimize coupling.
3. Check for possible ground loops. High frequency sources of electrical noise may still cause erratic behavior in extreme conditions. If readings are very erratic after wiring has been checked, check for a possible AC ground loop by temporarily moving the sensor to a sample of solution in a beaker or other container.

10.3 Troubleshooting Chart TX100

Symptom/Problem	Possible Cause(s)	Solution
Display Not Working	1) Power not connected	1) Connect Power (see Section 4.2)
	2) Power connections loose	2) Tighten connections. Press removeable power terminal block tightly into receptacle.
	3) Power connections reversed (reverse polarity)	3) Reconnect power supply in correct polarity (see Section 4.2)
"Buffer Err" displayed	1) Wrong buffer used	1) Make sure to calibrate in order, 7.00 or 6.86 first, then the 2nd buffer next (4.01 or 9.18 or 10.00).
	2) Buffer value is more than 1.5 pH units away from calibration buffer value.	2) Check to make sure correct buffer is used. If correct, electrode may be defective. Refer to electrode instructions for assistance.
	3) Input voltage (mV mode) is out of +/- 2000mV range	3) Possible electrode problem. Replace electrode and check again. Return transmitter to Factory Settings. Refer to Section 9.7.
"- - -" displayed	Various	Return transmitter to Factory Settings (RTF) Refer to Section 9.7

Part 11 Maintenance

11.1 Overview

The TX100 pH/mV transmitter needs little routine maintenance. The calibration of the transmitter should be checked periodically. To recalibrate the TX100 and electrode, see Part 8.

11.2 Replacement Parts

Replacement parts for the TX100 are available as a kit. This is the same kit that is in the TX100 box. For individual parts, please contact the factory.

11.2.1 Wall Mount Parts

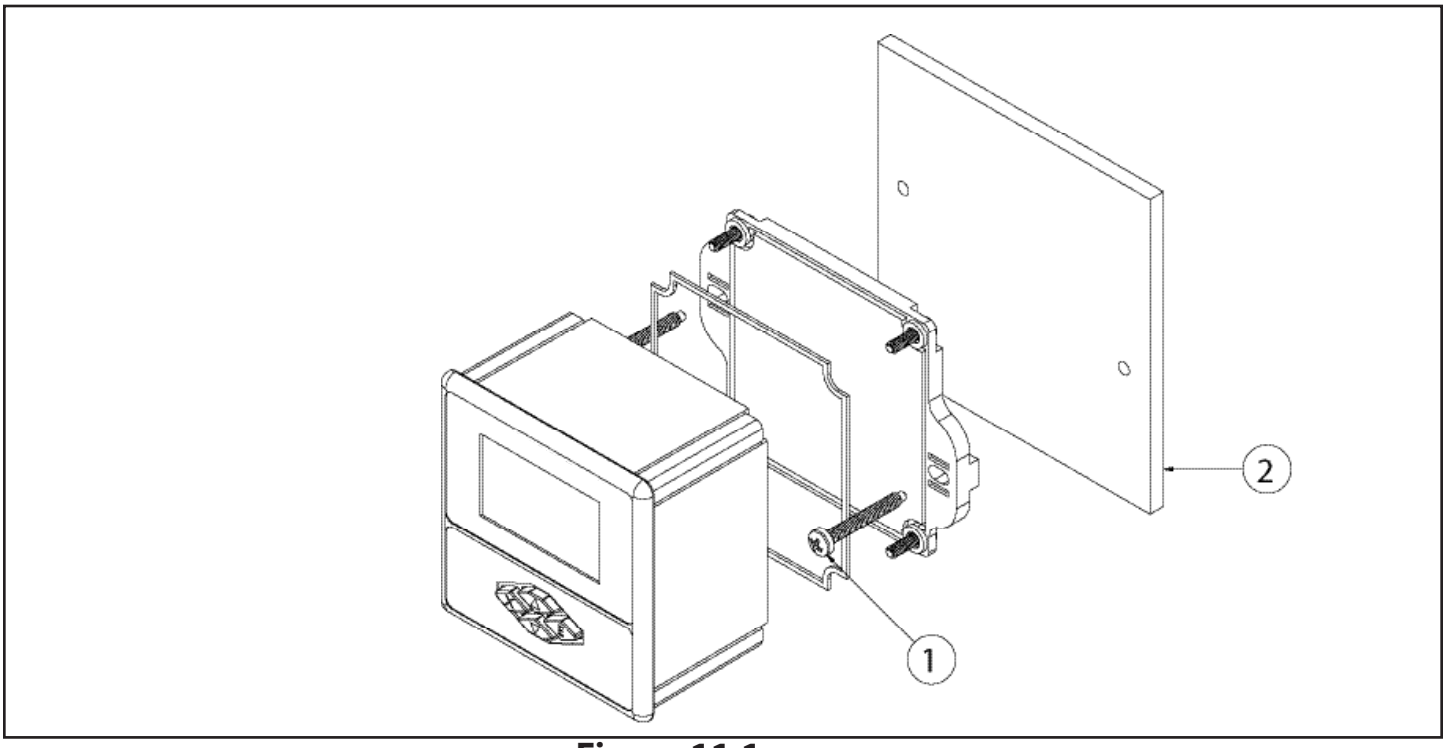

Figure 11.1

WALL MOUNT PARTS

Location in Fig 11.1	Qty in kit	Part Number	Description
1	0		No. 10 Self-tapping screw, 2 inches(customer supplied)
2	0		Wall (customer supplied)

11.2.2 Panel Mount Parts

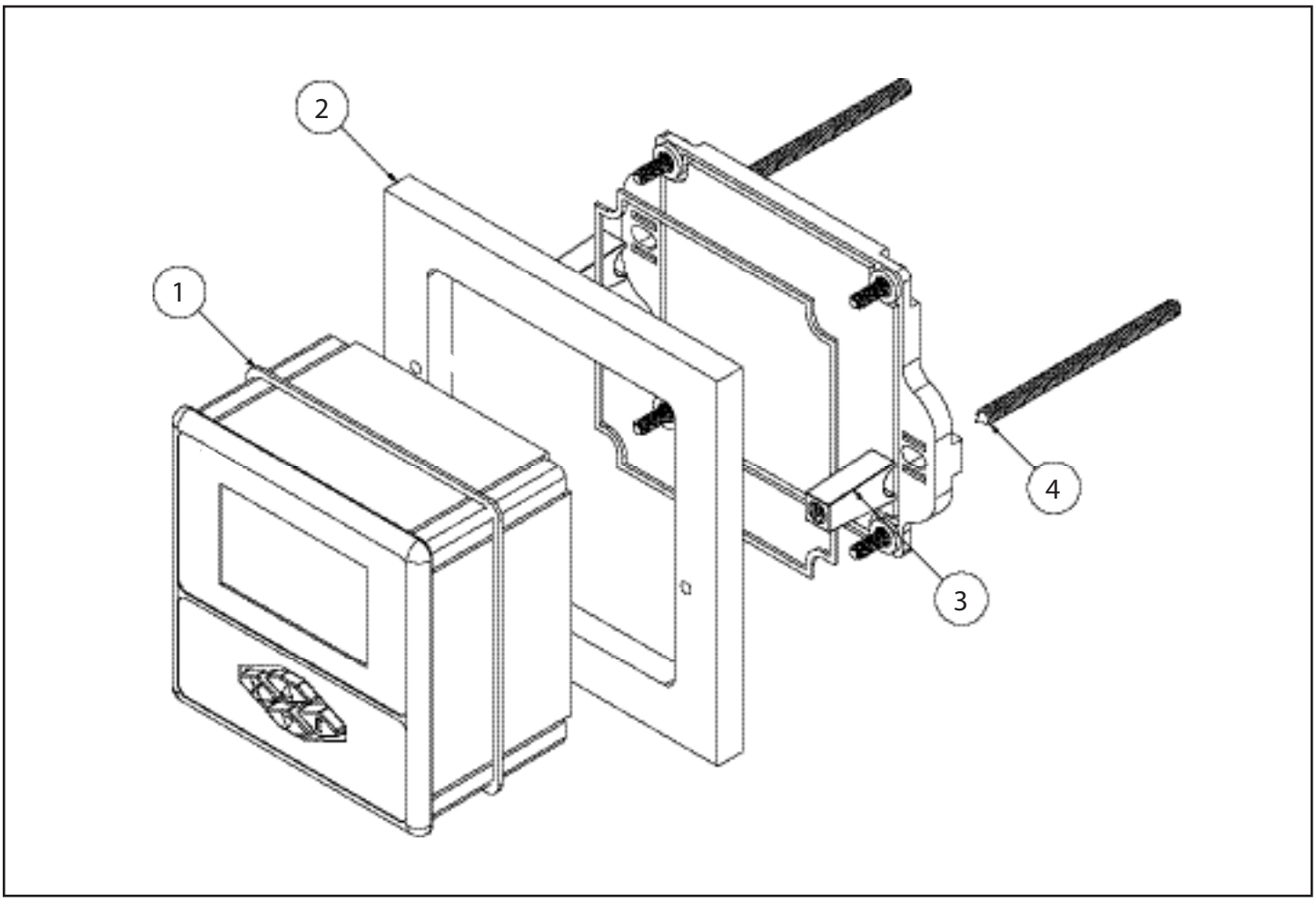

Figure 11.2

PANEL MOUNT PARTS

Location in Fig 11.1	Qty in kit	Part Number	Description
1	1	171121	gasket, panel seal
2	0	N/A	panel cut out (customer supplied)
3	2	171094	Panel mount bracket, plastic blue
4	2	271064	Threaded rod for panel mount

11.2.3 DIN Rail Mount Parts

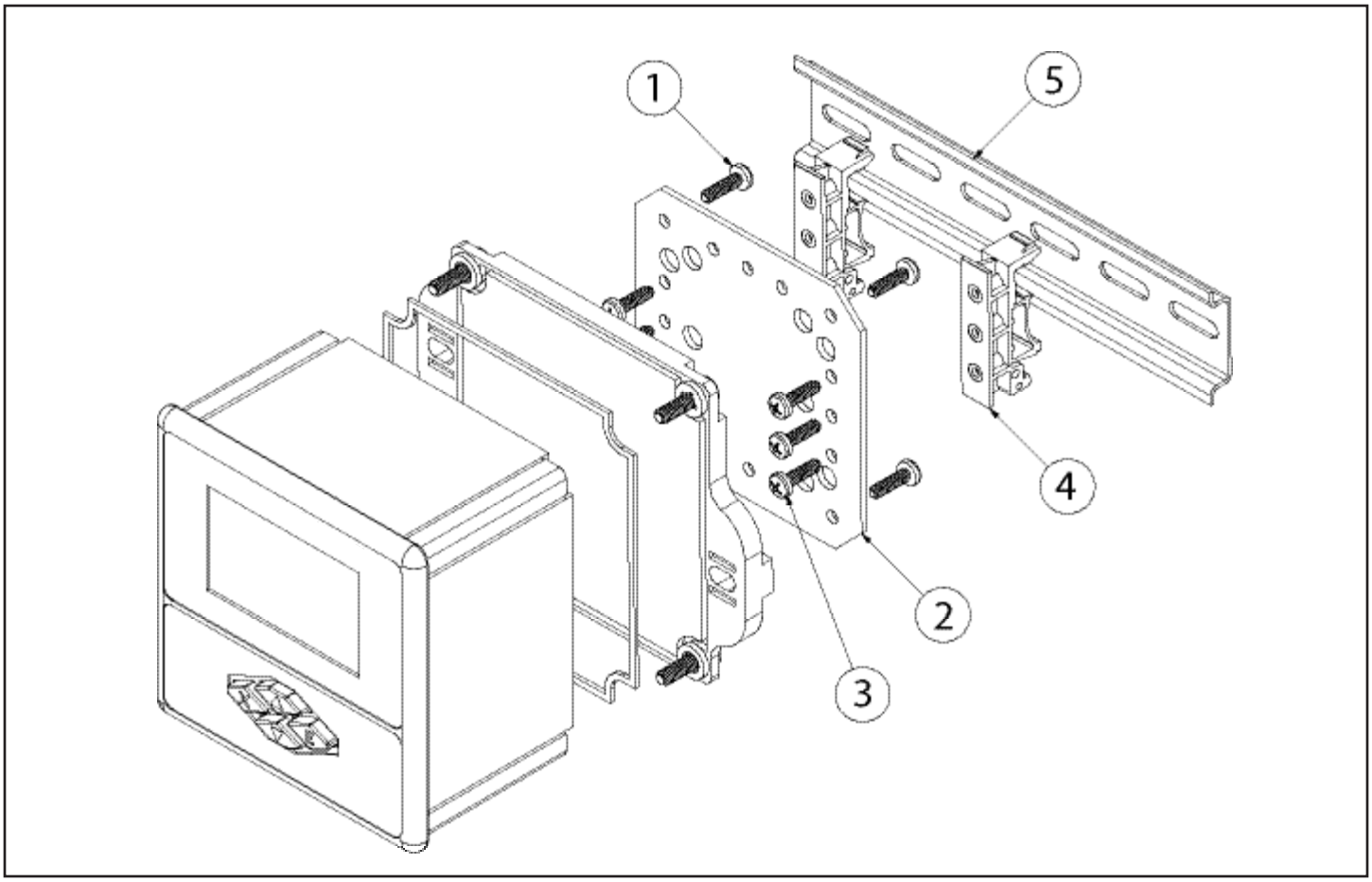

Figure 11.3

DIN Rail MOUNT PARTS

Location in Fig 11.1	Qty in kit	Part Number	Description
1	4	271067	Screws for mounting plate
2	1	171090	Mounting plate
3	6	271067	Screws for DIN rail clamp mounting
4	2	271073	DIN-rail clamp
5	0	N/A	DIN-rail (customer supplied)

11.2.4 Pipe Mount Parts

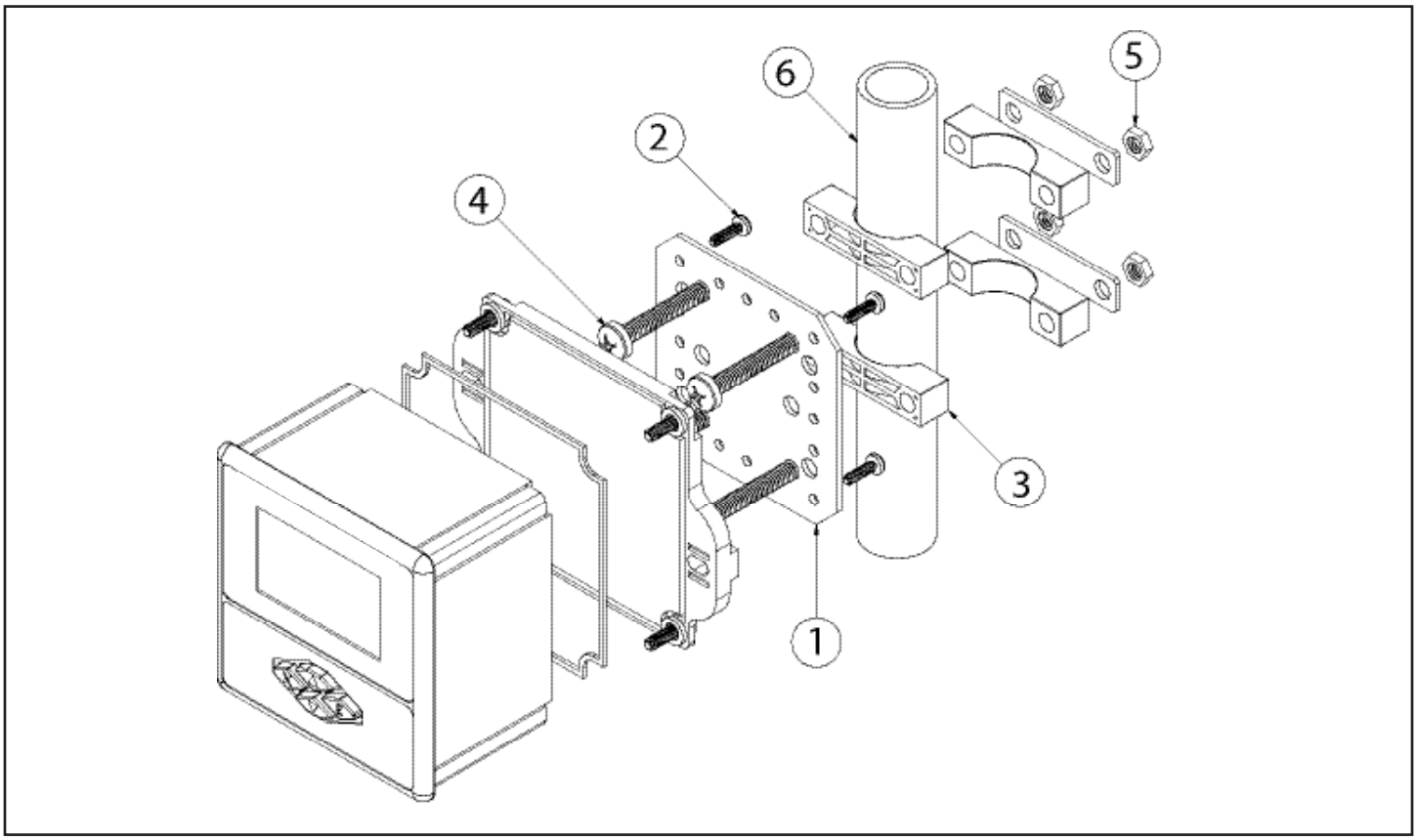

Figure 11.4

PIPE MOUNT PARTS

Location in Fig 11.1	Qty in kit	Part Number	Description
1	1	171090	Mounting plate
2	4	271067	Screws for mounting plate
3	4	171095	3/4" Pipe mount brackets, blue plastic
4	4	271068	Philips head bolt for mounting brackets
5	4	271071	Nut for mounting bracket bolt
6	0	N/A	3/4" pipe (customer supplied)
7	2	171091	3/4" pipe mounting plate/backing

Part 12 Warranty and Product Returns

12.1 Warranty

The TX100 pH/mV transmitter is supplied with a one-year warranty for material and workmanship from date marked on the product. However, SENSOREX offers no warranty, either expressed or implied, as to the useful life of the product. There are no implied warranties of merchantability or fitness for a particular purpose given in connection with the sale of any goods. In no event shall SENSOREX be liable for consequential, incidental or special damages. The buyer's sole and exclusive remedy and the limit of SENSOREX's liability for any loss whatsoever shall not exceed the purchase price paid by the purchaser for the product to which claim is made. A warranty card is included with this TX100 pH/MV transmitter instruction manual. Please complete it and mail or fax to Sensorex.

Sensorex Corporation
Attn: Warranty/ Returns Department
11751 Markon Drive
Garden Grove, CA. 92841 USA
fax: 714-895-4344

12.2 Return of Items

If repair is necessary and is not the result of misuse, contact Sensorex for a Return Goods Authorization Number (RGA#). No product returns will be accepted without prior authorization. You will be asked for the serial number of the transmitter and a description of the failure. Customers are responsible for incoming freight charges on returned products. Sensorex will pay all outgoing freight charges on warranted returns. If, after evaluation, the product is deemed damaged due to misuse, you will be contacted regarding repair charges.

Sensorex® *Liquid Analytical Solutions*

www.sensorex.com

Warranty Registration

Product / Model No. : _____

Serial No. :
(located on label on side of transmitter)

Date of Purchase. : D D M M Y Y Y Y

SOLD BY:

Title: _____ First Name: _____ Last Name/Surname: _____

Address: _____

City: _____ State: _____ Zip/Postal Code:_____ Country: _____

Telephone: _____ Fax: _____ E-mail: _____

Warranty Terms and Conditions

1. Please complete the warranty card and fax to 714-894-4839 within 30 days of purchase.
2. The Warranty shall become void if any unauthorized repair, tampering or alteration is done on to the product.
3. Do not remove or alter the serial number on the product. This will again void the warranty.
4. The owner of the product must present a copy of this warranty card to request RGA service.
5. The Warranty does not cover:
   a) Accessories, consumable items, wear and tear parts, corrosion, rusting or stains
   b) Incoming shipping cost when sending product in for repair
   c) Use of wrong electrical supply/voltage
   d) Dropping or other impact
   e) Use not in accordance with product manual
6. SENSOREX warrants all products to be free of defects in materials and workmanship for one year from date marked on the product or based on the serial number. However, SENSOREX offers no warranty, either expressed or implied, as to the useful life of these products. There are no implied warranties of merchantability of fitness for a particular purpose given in connection with the sale of any goods. In no event shall SENSOREX be liable for con sequential, incidental or special damages. All responsibilities for items not provided in this box (software, monitors, electrodes or power supplies) are not the responsibilty of Sensorex. The buyer's sole and exclusive remedy and the limit of SENSOREX's liability for any loss whatsoever shall not exceed the purchase price paid by the purchaser for the product to which claim is made.

NOTES:

Sensorex®
11751 Markon Dr.
Garden Grove, CA 92841 USA
Tel: 714-895-4344
Fax: 714-894-4839
E-mail: info@sensorex.com
www.sensorex.com

Form: INSTRTX100-RevG
©2011 Sensorex Corporation